Cross-cutting Aspects of DMS and EMS Applications for the Smart Grid

Draft for discussion

Nokhum Markushevich

Smart Grid Operations Consulting

n.markushevich@smartgridoperations.com

List of DMS Applications

- Real-time Distribution Operation Model and Analysis (DOMA) including Transmission Bus Load Models (BLM)
- Fault Location, Isolation and Service Restoration (FLIR)
- Voltage/Var/Watt Optimization (VVWO)
- Distribution Contingency Analysis (DCA)
- Multi-level Feeder Reconfiguration (MFR)
- Relay Protection Re-coordination (RPRC)
- Pre-arming of Remedial Action Schemes (PRAS)
- Coordination of Emergency Actions (CEmA)
- Coordination of Restorative Actions (CRA)
- Intelligent Alarm Processing (IAP)

Groups of EMS Applications. Normal Operating Conditions

- Load forecasting functions (LF)
- Generation monitoring functions (Part of Wide Area Situational Awareness)
- Generation control functions
- Transmission monitoring functions (Part of Wide Area Situational Awareness**)**
- Near-real-time transmission optimization functions
- Real-time transmission control functions
- Post factum analyses of transmission operations.

EMS monitoring functions (Wide Area Situational Awareness)

- Topology monitoring (incl. states of controlling devices)
- Transmission Bus load modeling (TBLM)
- State estimation (SE)
- Dynamic limit monitoring (DLM)
- Network Sensitivity Analysis (NSA)
- Reserve monitoring (RM)
- Steady-state contingency analysis (SCA)
- Dynamic security analysis (DSA)
- Cyber Security Contingency Analysis (CSCA)
- Intelligent alarm processing (IAP)

Near-real-time EMS optimization and control functions

- Optimal Power Flow (OPF), includes Volt/var management
- Security Constrained Dispatch (SCD)
- Economic Dispatch (ED)
- AGC
- Ancillary functions

Groups of EMS Applications.
Emergency Operating Conditions

- Near real time pre-arming and re-coordination functions
- Real-time remedial action functions
- Real-time restorative functions

Near real time pre-arming and re-coordination functions

- Relay protection (RP)
- Load-shedding (LSh)
- Generator-shedding (GenSh)
- Fast generator starts based on operational parameters (GenStart)
- Intentional islanding in transmission (T-Islanding))
- Intentional islanding in distribution (D-Islanding)
- Voltage/var management (VVM)
- Distributed generation pre-setting (DER)
- Demand response pre-setting (DR)
- Electric storage enabling pre-setting (ES)
- Re-coordination of protection in distribution systems (RPRC)

Real-time remedial action functions

- Load-shedding
- Generator-shedding
- Fast generator starts based on operational parameters (angle, voltage, frequency, other)
- Intentional islanding in transmission
- Intentional islanding in distribution (micro-grids)
- Distributed generation starts
- Demand response enabling
- Electric storage enabling
- Transmission sectionalizing
- Voltage/var management

Real-time restorative functions

- Auto-synchronization
- Restoration of shed loads (Load)
  - After under-frequency load shedding
  - After under-voltage load shedding
  - After special load shedding
- Reset of distributed generation (DER)
- Reset of Demand Response (DR)
- Reset of electric storage (ES)
- Reset of VVO objective (VVM)

Interrelationships between DMS and EMS functions (non-exhaustive)

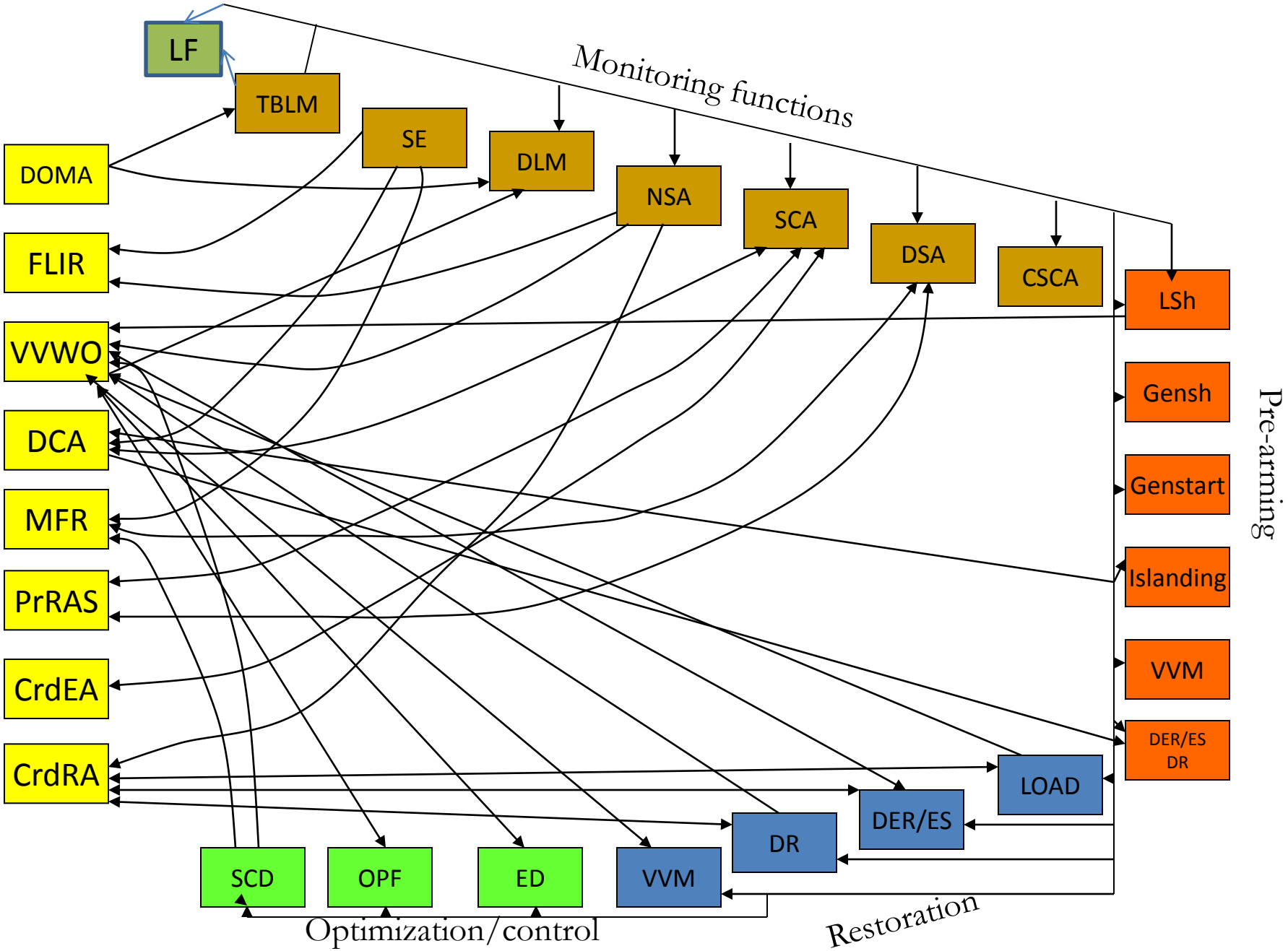

Information Exchange between T&D Domains through TBLM

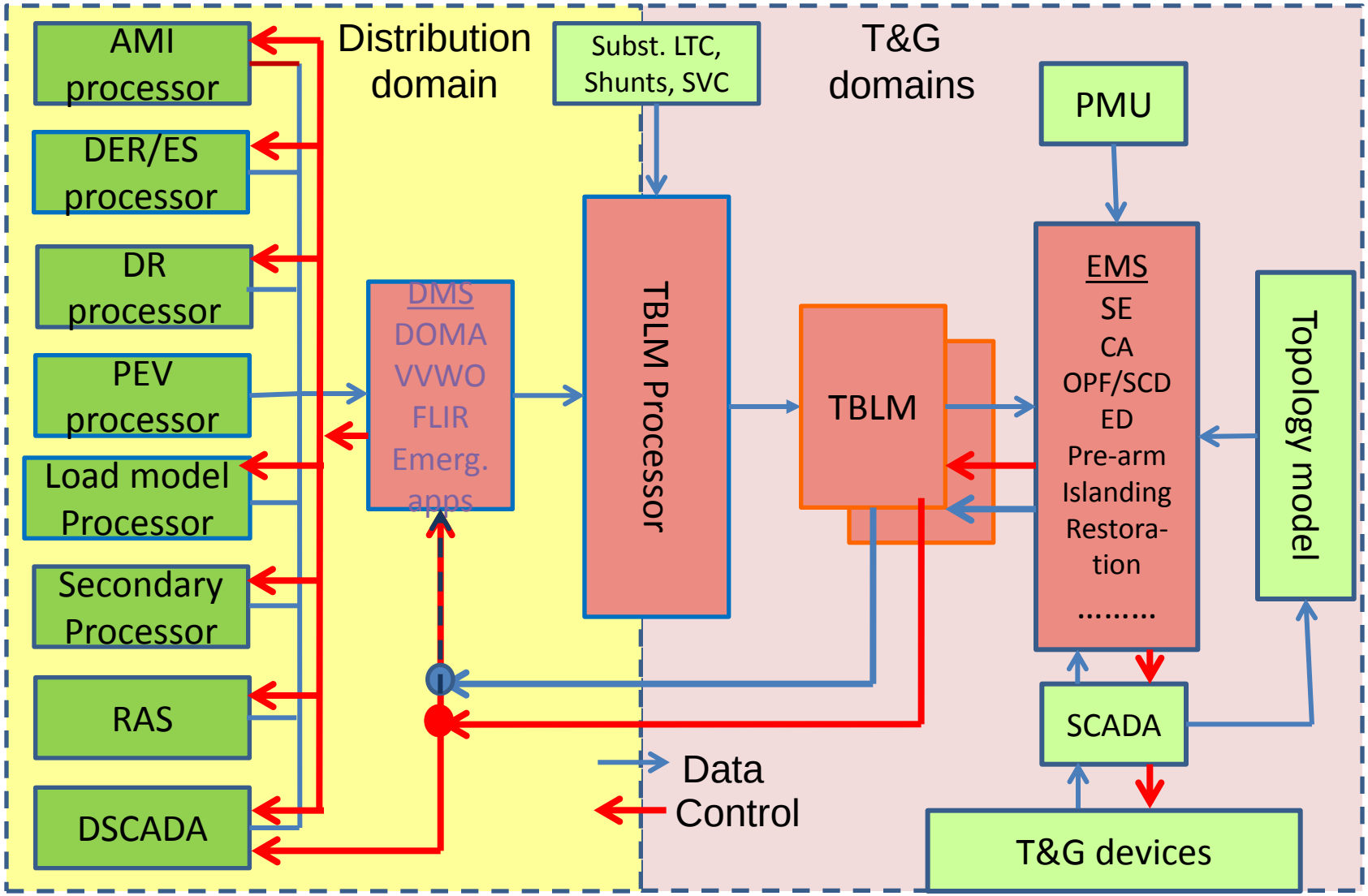

Examples of cross-cutting aspects of DMS functions

Distribution Operation Modeling and Analysis (DOMA)

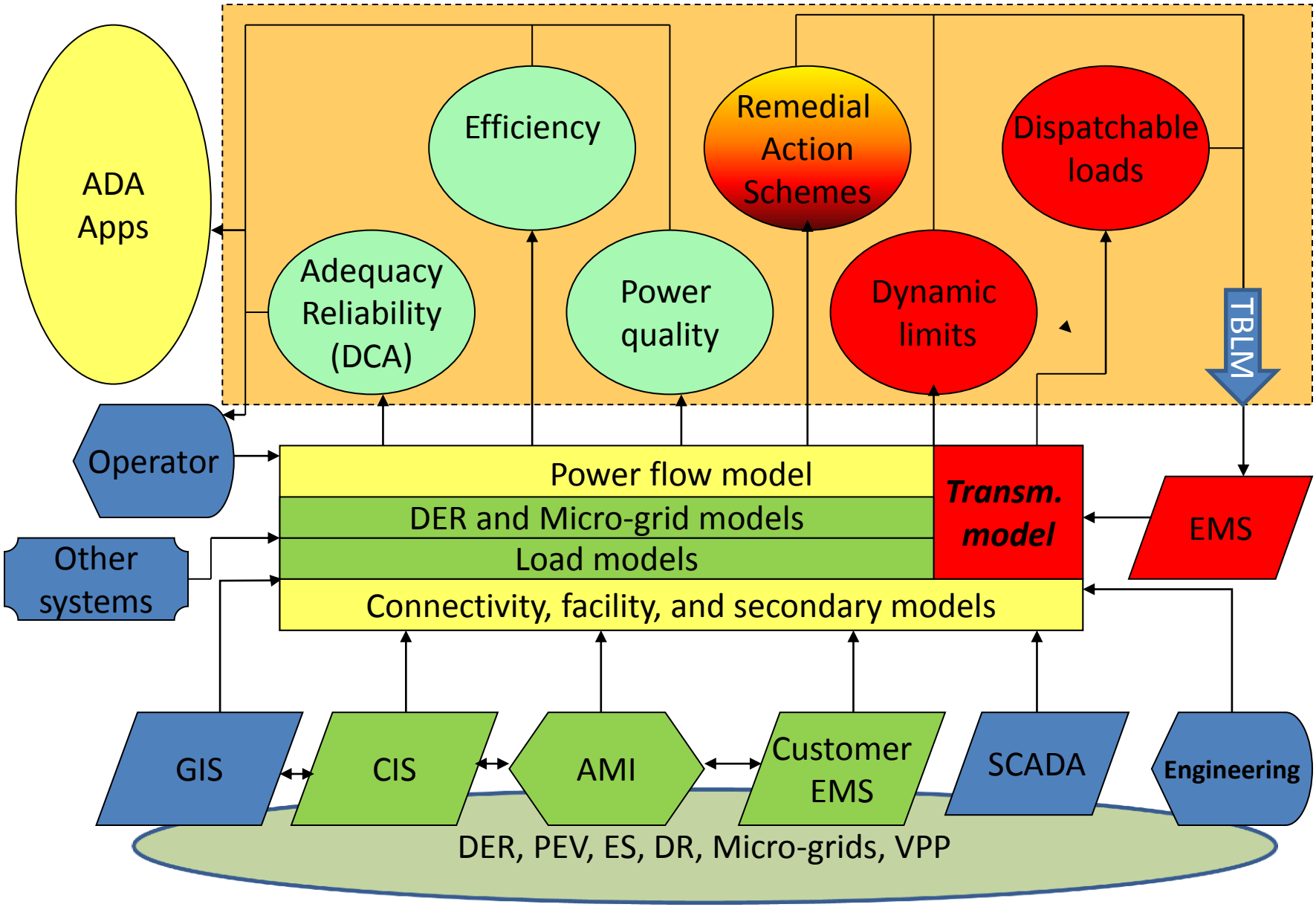

Integrated Voltage, Var, and Watt Control (IVVWC)

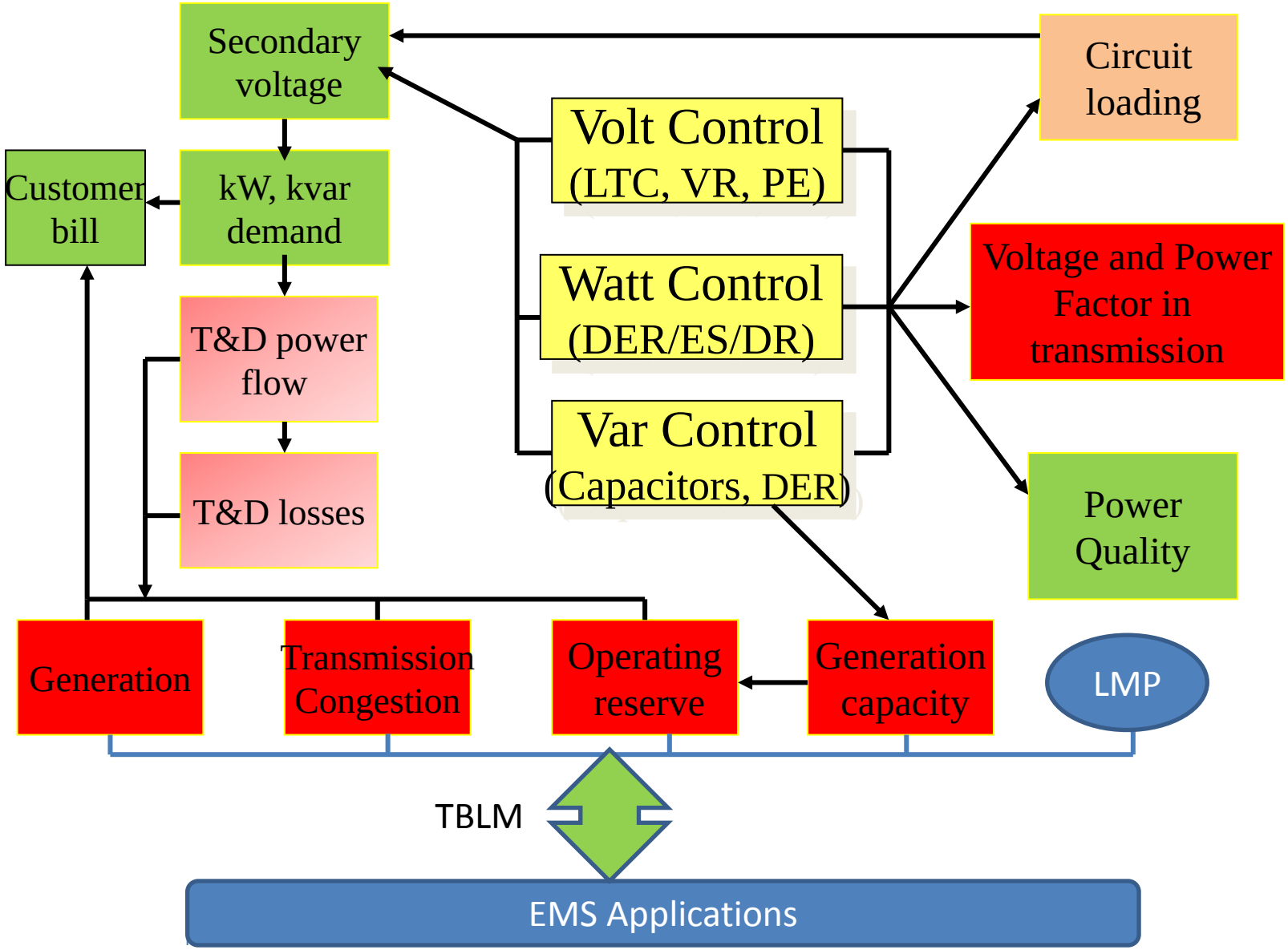

Inter- and Intra-domain Objectives of IVVWC

Ensure standard voltages at customer service terminals

- Reduce load by a given value
- Conserve energy
- Minimize feeder segment(s) overload
- Reduce or eliminate overload in transmission lines
- Reduce or eliminate voltage violations in transmission
- Provide reactive power support for transmission
- Provide spinning reserve support
- Reduce cost of energy
- Reduce energy losses in D&T
- Expand operational tolerances for G/T operations

Inter and Intra-domain Constraints of IVVWC

- Voltage limits at the customer service terminals.
- Voltage limits in selected point of distribution primaries
- Loading limits of distribution elements
- Loading and voltage limits in transmission
- Reactive power or power factor limits in T&D
- Capability limits of DER/ES/DR
- Operating reserve limits
- LTC and VR limits
- Capacitor control limits

Contingency Analysis

Two-area load-rich transmission-generation island with DER in distribution (after the fault)

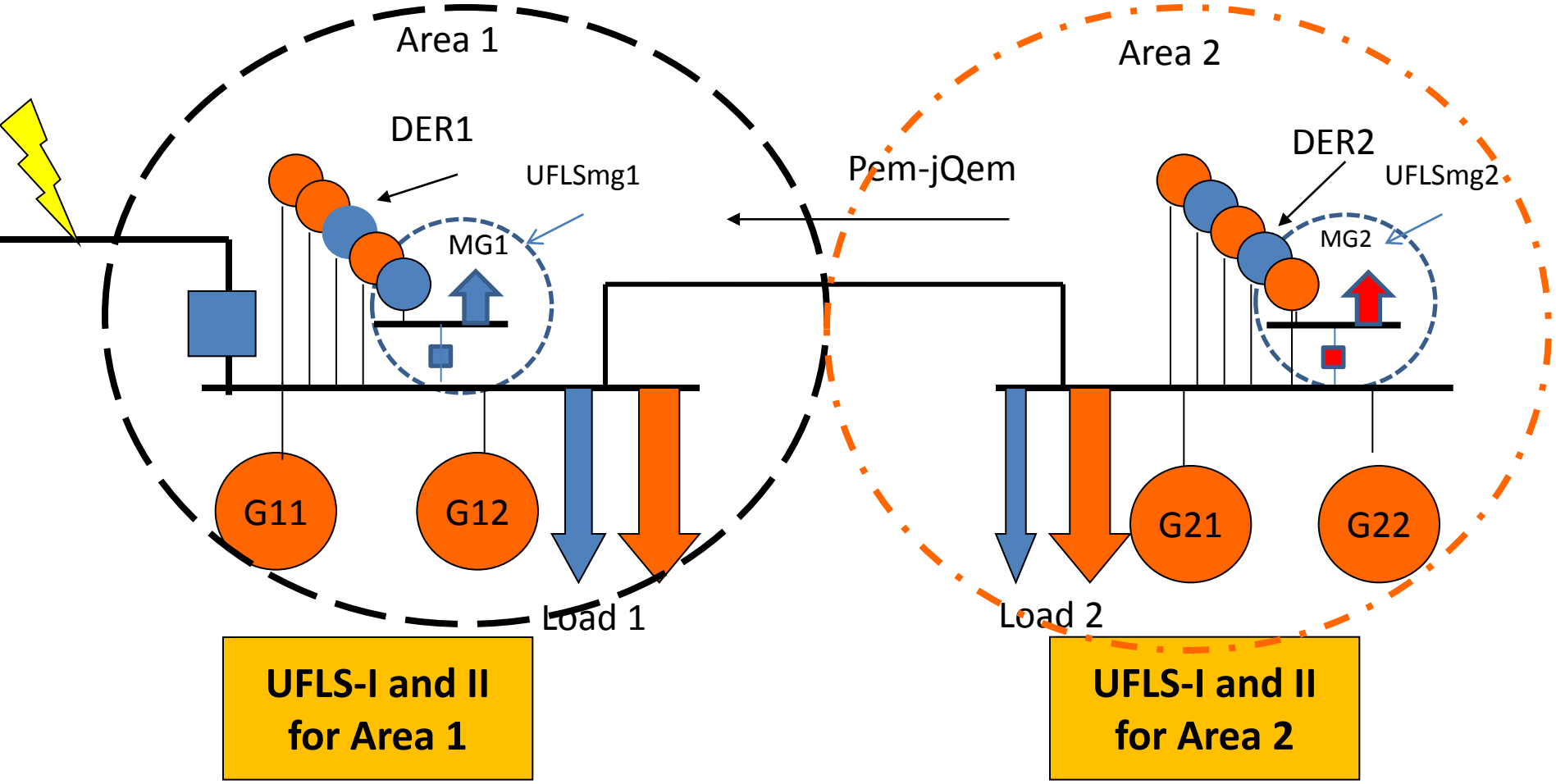

Disconnected

Connected

Cross-cutting Aspects of Contingency Analysis

- The transmission contingency analyses should define whether the distortion can cause significant disconnection of DERs and reactions of other controlling devices
- Disconnection of these DERs may cause overloads and under-voltages in distribution and can worsen the situation in the transmission system.
- The severity of the contingency also depends on the DER protection settings and on load-generation balance of micro-grids
- Models of the emergency behavior of DER, DR, ES and other controlled devices aggregated at the transmission buses should be made available to WAMPAC applications
- The probable distortions of transmission operations should be made available to the DMS for the DCA to assess the possible consequences.

Fault Location, Isolation and Service Restoration (FLIR)

Constraints of FLIR Imposed by Different Domains

- Loading of distribution facilities
- Voltages at customer terminals
- **Loading of transmission facilities**
- **Voltage angle differences for adjacent transmission buses (depends on transmission operations)**
- Demand response limitation
- DER operational limitations
- Electric storage limitations

Controllable Variables of FLIR

- Switching devices within T&D substations and feeders
- Switching devices in DER PCCs
- Demand response direct control triggers
- Modes of operations/setpoints of DER/Micro-grid controllers/customer EMS
- Reliability price signals.
- Synchronizing switching devices
- The IVVWC will be automatically involved, if needed for volt/var and phase angle support

Multi-level Feeder Reconfiguration (MFR)

Cross-cutting Aspects of MFR

- Use EMS input on phase angle differences before paralleling in distribution
- Use information on congestions in transmission for swapping load between buses with different LMPs
- Use information from customer domain on operations of DER/ES and DR and information from AMI

Relay Protection Re-coordination (RPR) and Coordination of Emergency Actions (CEmA)

Cross-cutting aspects of RPR and CEmA

- The applications will receive pre-arming signals from WAMCS and will change the setups of distribution-side remedial action schemes
- WAMCS applications will take into account
  - the protection settings of the DER and the generation-load balances of micro-grids
  - the available extent and timing of the distribution-side remedial schemes, which should be armed
- CEmA will recognize the emergency situations and will coordinate the objectives, modes of operation, and constraints of other Advanced DMS applications.

Coordination of Restorative Actions (CRA)

Cross-cutting Aspects of CRA

CRA will coordinate the restoration of services and normal operations based on the availabilities in distribution, transmission, and generation domains after the emergency conditions are fully or partially eliminated.

Examples of EMS applications associated with DMS applications

For normal operating conditions

- Wide Area Situational Awareness (WASA)
  - Model Updates (includes TBLM)
  - State Estimation (provides voltage angles for MFR and FLIR)
  - Network Sensitivity Analysis (includes TBLM)
- Optimal Power Flow (uses controllable parameters and constraints through TBLM)
- Economic Dispatch (takes into account aggregated VPP, DER/ES through TBLM)
- Reserve Monitoring (takes into account DER/ES, DR, IVVWO through TBLM)
- Other….

For Emergency Operating Conditions

- Steady-state contingency analysis (Uses aggregated TBLM variables, e.g., load-to-voltage and load-to-frequency dependencies, DER and DR behavior)
- Dynamic security analysis (Uses aggregated TBLM variables, e.g., dynamic load-to-voltage and load-to-frequency dependencies, DER and DR behavior)
- Security Constrained Dispatch (Uses aggregated TBLM variables)
- Near Real-time Pre-arming (Includes Remedial Action Schemes and DER protection schemes in distribution through TBLM)
- Remedial Actions (includes load shedding, emergency volt reduction, DR in distribution through TBLM)
- Service restoration (Provides availability from transmission standpoint for restoring loads, DER/ES, DR, and normal IVVWO operations)

Recommended first priority Use Cases for TnD DEWG, PAP 14

- Transmission Bus load modeling
- Steady-state contingency analysis
- Voltage stability analysis
- Frequency stability analysis
- Cyber Security Contingency Analysis
- Optimal Power flow/Security Constrained Dispatch
- Reserve monitoring
- Other WAMPAC (Wide Area Monitoring, Protection, And Control) applications

Conclusions

- The EMS and DMS applications for Smart Transmission and Distribution grids are tightly interrelated, and they should be functionally integrated to provide the needed security and efficiency of power system operations.
- To make the dynamic optimization manageable in a holistic manner, **decompositions** of the operational models of each domain should be used, and **aggregated information exchange** between the domains should be provided

➢ The concept of the aggregated Distribution Operation Models at the Transmission buses (TBLM) is suggested so meet these requirements.

❑ The **sophistication** of the TBLM and the Smart Grid applications should match the **complexity** of the processes in power systems to achieve maximum benefits.