AMI INFORMATION SUPPORT OF DISTRIBUTION AND TRANSMISSION OPERATIONS

Nokhum Markushevich,

Smart Grid Operations Consulting

1. Introduction

The richness of the current contents of AMI-provided data and the opportunities of collecting more data due to the digital technology of the smart meters suggest a broader utilization of these information resources than just revenue data and fault indication. Several studies on utilization of AMI-provided data for DMS applications were performed, proving the benefits of such broader use of AMI [1]-[4]. Some utilities are using measurements from the smart meters for voltage control in distribution with the energy conservation objective, e.g., the Dominion utility, Richmond, Virginia.

While the AMI information support serves the DMS application, it at the same time benefits the transmission operations through the aggregated at the transmission buses distribution operation model (TBLM) [5].

This paper summarizes the results of the above-mentioned studies with updates based on the use cases developed so far in the NIST SGIP TnD Domain Expert Working Group [6]-[7].

The object/data models which are or can be based on the AMI-provided data, the major actors involved in the destitution operations using these models, and the logical interfaces between these actors are presented in Appendix A.

The information exchanges through these interfaces defined in [6] and their coverage by the ANSI C12-19 standards are presented in Appendix B.

2. Summary assessment of expected benefits and information support requirements for Utilizing AMI-based capabilities in Distribution Automation (DA) applications.

1. Advanced Distribution Automation applications are based on near real-time computer-aided models of distribution operations supported by corporate databases and scarce SCADA measurements. With the implementation of the AMI, a large volume of customer-side information becomes available for use by the DA applications. Some of this information may be available within minutes and some within tens of minutes or hours after the fact.
2. The models for advanced DA applications must reflect not only the current state of the object but also support the states of the objects in the look-ahead timeframes and the changes of these states dependent on changing conditions. Consequently, the models shall be predictive and adaptable.
3. The fundamental model for the advanced DA applications is the power flow/state estimation model comprising relevant transmission equivalent and detailed distribution power flow down to the equivalents of the secondary circuits (Figure 1).

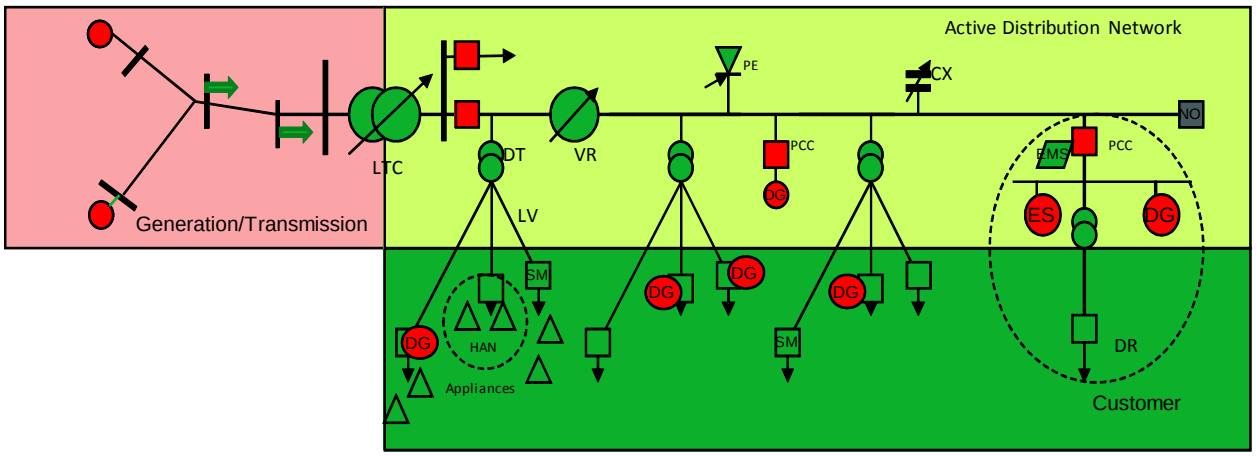

Figure 1. Scope of distribution power flow/state estimation

4. The major component object/data models used for the power flow modeling are the following:
   - Connectivity (topology) and power equipment models
   - Local controllers models
   - Nodal load models (predominantly distribution transformers load models), including Demand Response (DR) and embedded Distributed Energy Resources (DER)
   - Stand-alone DER models, including Electric Storage (ES)
   - Aggregated Micro-grid models
   - Secondary circuit equivalent models.

The last four models can be improved by utilizing the AMI-supported data. The first two models can also be improved indirectly based on the AMI-supported data. This improvement will be realized through the state estimation procedure, in which the AMI-supported models are more accurate, and therefore, the less observable models can be estimated more accurately.

5. The critical results of the power flow models that are monitored and optimized by the DA applications are the loading of the circuit elements and the voltages at the designated buses, predominantly at the customer terminals. The accuracy of these power flow results impacts the actual operational tolerances within which the operations are satisfactory and the optimization of the operations can be performed. The actual operational tolerances shall be reduced by the value of modeling errors to avoid violations of the operational limits. Consequently, the more accurate the power flow models, the wider are the tolerances, the better is the utilization of the power system facilities and the greater may be the benefits of the optimizing DA application. As a result, better model accuracy is a source of the additional DA benefits (Figure 2).

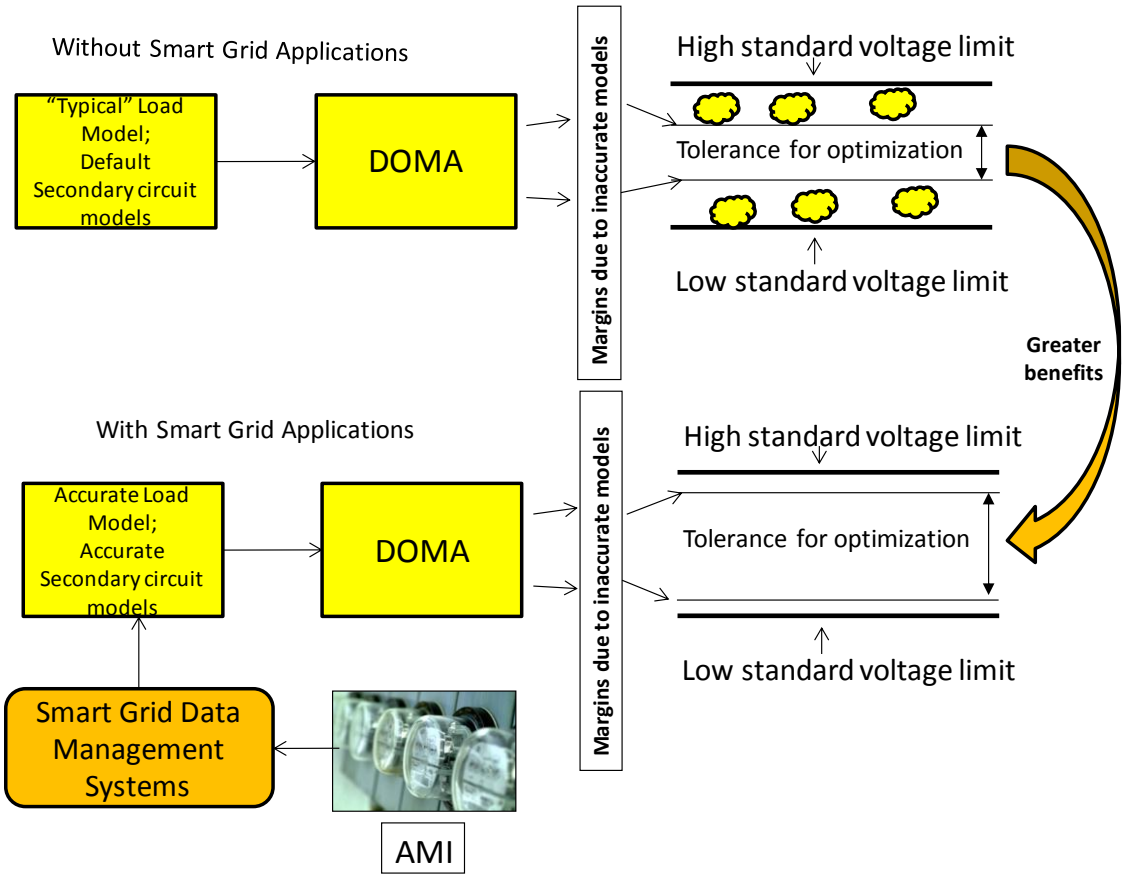

Figure 2. Impact of accuracy of models on actual voltage tolerances

6. The data models that can be improved by utilizing AMI-supported data are not the only models involved in the advanced DA applications. The injections of real and reactive power from significant DER and reactive power sources are components of the state estimation and power flow modeling procedures. Information from these sources should be provided either from corresponding IEDs or from the adaptive models of these objects. If this information is not available or is significantly erroneous, the efficiency of high accuracy from AMI devices will be diminished. As a result, the requirements for the accuracy of AMI-supported models shall be considered in combination with the accuracy of other component models not related to AMI. If these errors are dominant, the cost of improvement of AMI-supported models may not be justifiable.
7. Another outcome of the distribution power flow is the voltage in the secondary circuits. The error in modeling these voltages consists of the following component errors:
   - Errors in measurements of the reference voltages
   - Errors in modeling the voltage transformation by voltage regulators
   - Errors in modeling the voltage drops in the feeder primaries
   - Errors in modeling the voltage drops in distribution transformers
   - Errors in modeling the voltage drops in the secondary

   Assuming that the component errors are random and independent of each other, the resultant error of the low voltage model can be estimated as follows:

   $$\Delta Vlv = [(\Delta Vref)^2 + (\Delta Vmv)^2 + (\Delta VDdt)^2 + (\Delta VDsec)^2]^{0.5},$$

   where

   ΔVlv - low voltage error,

   $\Delta Vref$ – error in voltage measurements at the reference bus,

   ΔVmv – error in voltage model in the medium voltage circuits,

   $\Delta VDdt$ – error in the model of the voltage drop in the distribution transformer,

   $\Delta VDsec$ - error in the model of the voltage drop in the secondary circuits

   Of these errors, the last three are closely related to the AMI-supported information.

8. The accuracy of calculations of the voltage drops in the feeder primaries mostly depends on the accuracy of the circuit topology and its parameters that is not directly related to the AMI. It also depends on the accuracy of the loading of primary feeder elements that can be accurately modeled even with significant errors in the nodal load models (Figure 3). As seen in the figure, in the most loaded segments the errors in the voltage drop calculated by DSE do not exceed 0.1% of nominal voltage.

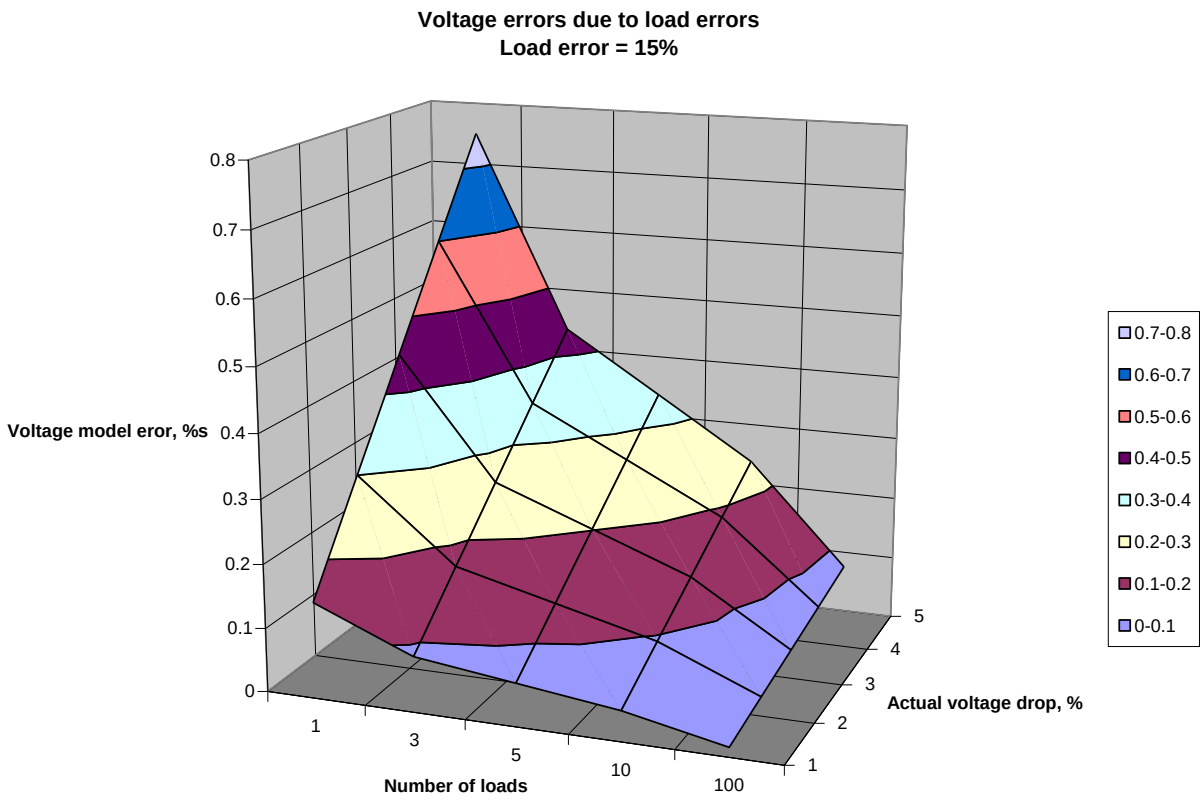

Figure 3. Errors in voltage drop in the MV segments due to nodal load errors. Load error = 15%

9. The requirements for accuracy of the models of the voltage drops in the distribution transformers define the requirements for accuracy of the nodal load models. It must be noted that the errors of reactive loading also have a significant impact on the voltage drop errors (see an example in Figure 4). As seen in the figure, to keep the voltage drop error within 0.3%, the errors in real and reactive load models of the distribution transformer should not exceed ±5% (if the errors are of the same sign), and to keep it within 0.5%, the real load error may be up to 25%, if the reactive load error is within 5%. If the reactive load error is 10%, the real load error should not exceed 5%. As seen from this example, the errors in reactive load model may be more critical than the errors in the real load model.

		kvar errors, p.u. of kVA										
		-0.25	-0.2	-0.15	-0.1	-0.05	0	0.05	0.1	0.15	0.2	0.25
kW errors, p.u. kVA	-0.25					-0.43	-0.20	0.02	0.25	0.476		
	-0.2					-0.39	-0.16	0.07	0.29			
	-0.15					-0.35	-0.12	0.11	0.34			
	-0.1					-0.31	-0.08	0.15	0.38			
	-0.05				-0.50	-0.27	-0.04	0.19	0.42			
	0				-0.46	-0.23	0.00	0.23	0.46			
	0.05				-0.42	-0.19	0.04	0.27	0.50			
	0.1				-0.39	-0.15	0.08	0.31				
	0.15				-0.35	-0.12	0.12	0.35				
	0.2				-0.31	-0.08	0.15	0.39				
	0.25				-0.28	-0.04	0.19	0.42				

Figure 4. Voltage drop error in three-phase distribution transformer vs load model accuracy

10. The accurate distribution transformer load models can be combined from synchronized in time load data collected by Smart Meters associated with the particular distribution transformer. This process can be accomplished in the AMI DMS.

11. Two approaches of delivering the distribution transformer load models to the DA applications can be considered:

a. Direct use of load measured by Smart Meters consisting of the following steps:

- Collecting the load measurements from the Smart Meters after each periodic measurement
- Combining the individual load measurements into distribution transformer load models
- Delivering these models to the DA applications as soon as it is processed

For the near real time and especially for the look-ahead DA applications, these models will be behind the time of their use. Study [1] shows that the errors in the distribution transformer voltage drop modeling due to the latency can be unacceptable even with 15-minute update intervals. Also, the burden on the communications imposed by near-real time transmission of high-volume data may be also unacceptable.

b. Use of representative adaptive load models for clusters of similar nodal loads consisting of the following steps:

- Storing the real and reactive load measurements and available relevant load-impacting factors in the Smart Meters
- Delivering the stored data to the AMI DMS at the times of low communication traffic
- Aggregating the load data into distribution transformer load profiles
- Normalizing the load profiles to the nominal impacting factors (weather, prices, etc.) based on previously derived dependencies and adding them to the historic load database
- Periodically updating the load dependencies on impacting factors

- Deriving representative load profiles for the look-ahead time interval (e.g. day ahead) for clusters of similar load model patterns
- Delivering the updated load models and their dependencies to the DA applications as needed

Examples presented in [1] show that this approach combined with the distribution state estimation may provide satisfactory accuracy of modeling the voltage drops in the distribution transformers. The use of small renewable generation in the customer premises and applied DR will alter the load pattern, making it much more dependent on the external conditions. The adaptive load models should be developed to capture these changes of the load patterns.

12. The significant component of the distribution circuit model is the secondary line between the distribution transformer and the customer meter (Figure 5). Study [1] shows that the critical voltage drops in the secondary circuits can be represented as a function of the distribution transformer real and reactive load model. These functions can be derived based on voltage measurements collected by Smart Meters, on actual distribution transformer loading derived by combining the corresponding load measurement from the Smart Meters, and on distribution transformer bus voltage models obtained from the Distribution state estimation. In this case, there is a two-way information exchange between the DA application and AMI DMS.

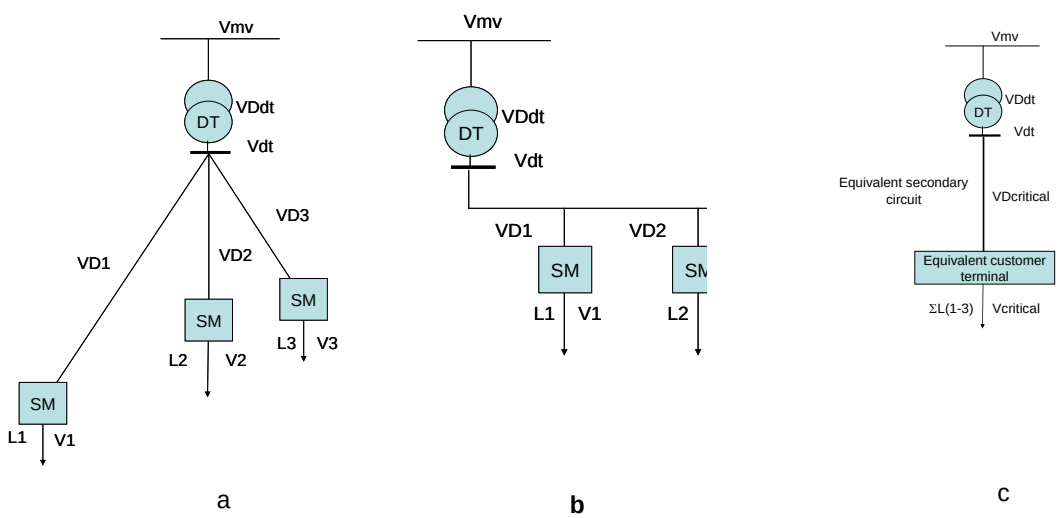

Figure 5. Sample secondary circuits and their equivalent. a - parallel connection; b - series connection; c – equivalent model

13. There are other component errors impacting the accuracy of end-use voltage models. Each distribution power flow uses a reference bus voltage and will take into account the behavior of the intermediate locally controlled devices, (e.g. voltage regulators and switched capacitors). If one or several errors are significantly greater than the others, the improvement of the composite error due to the smaller error of one component may be insignificant. If some of the component errors are dominating, and they cannot be reduced, the cost of reducing the errors of other components may not be justified.

14. In addition to the accuracy of the operation model, the benefits of the optimizing (controlling) DA applications depend on the accuracy of execution of the optimal solutions. If the accuracy of the controllable devices is low, the efficiency of the higher model accuracy may be significantly reduced. In order to avoid unjustifiable investment, the requirements for the model accuracy should be coordinated with the achievable accuracy of the controls. An example is presented in Figure 6. The objective of IVVO is load reduction. The potential load reduction within the ideal voltage tolerances is 3%. As seen in the figure, if the accuracy of the control is about 2% (e.g., due to large bandwidths of voltage control), the achievable load reduction does not exceed 0.5%, even with high accuracy models.

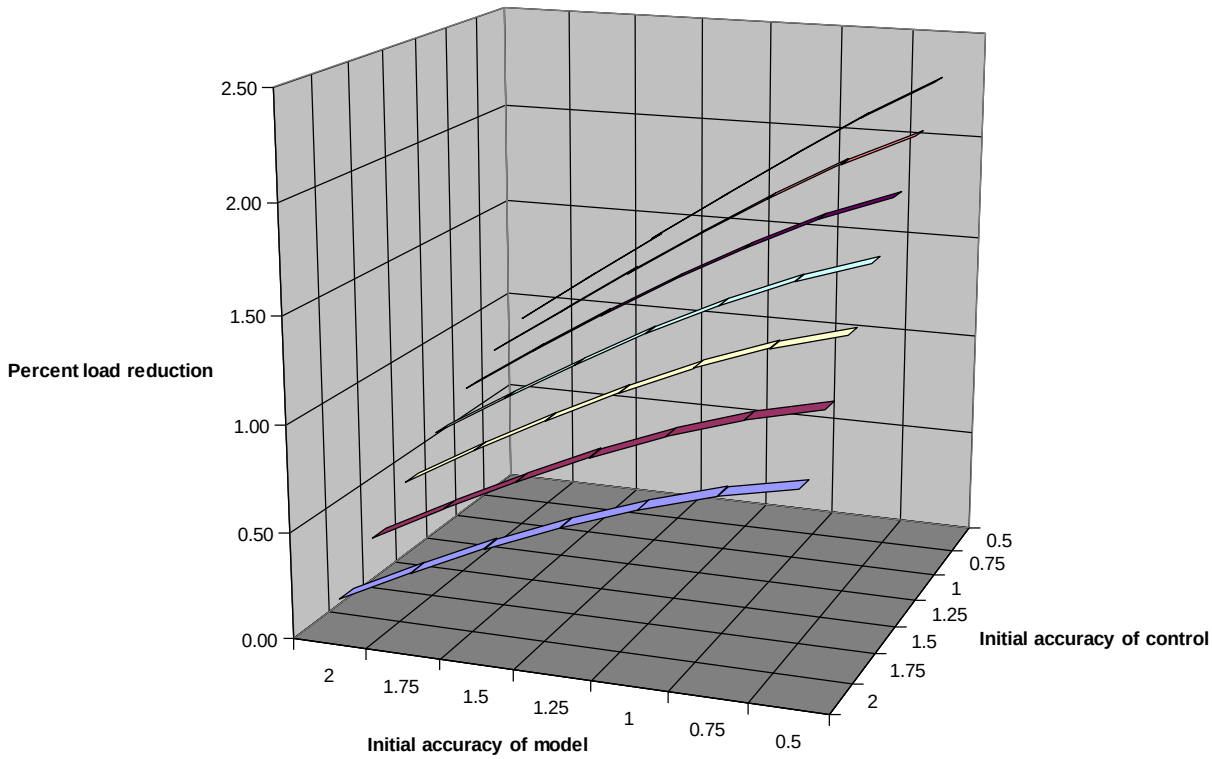

Figure 6. Realized benefits in load reduction vs accuracies of control and model. The potential benefits = 3%.

15. The need for accuracy in voltage models used in DA applications is not the same for each distribution node. The monitoring DA applications will check whether the voltages at the customer terminals are all the time, or most of the time, within the defined voltage limits. For a large number of customers, the voltages do not approach the voltage limits most of the times. From the voltage quality standpoint, the distribution operations are limited by the voltages in "voltage-critical" points, where the voltages reach either the lowest or the highest voltage limit. The accuracy of voltage models in these points shall be the highest. There are not that many critical points in each distribution circuit. Although the critical points are not the same all the times, a set of most likely critical points for a given time interval (e.g. season) could be defined, based on the DOMA output. This factor can be used to relax the accuracy requirements for most of the distribution nodes and to reduce the volume of information exchange between the AMI DMS and DA applications. To use this possibility, the DA applications should deliver the list of critical points to the AMI DMS.

16. In the Smart Grid environment, when many loads become “active” loads, adaptive load models depending on different triggers and conditions for load management should be developed. The input information for such models should be collected from the Smart Meters, customer EMS devices, from different sources of operational triggers, such as real-time pricing sources, reliability trigger sources, weather sensors and systems, contractual agreements with customers, DER schedules and characteristics, field test results, etc. This information can be collected and stored in the AMI DMS. Based on these conditions and historic data, the load models should be normalized to the nominal conditions and dependencies of the load on the changes of these conditions should be derived. This will create the composite adaptive load models, which can be used in the DA applications, for which the actual near-real time and/or predicted impacting conditions would become available.
17. Another category of added benefits from more accurate models is the benefits from the higher confidence of the personnel in the operational models. Most of the benefits of advanced DA applications come from a fuller utilization of the operational tolerances in the near real time. At the present state of the situational awareness of the distribution operations, the operators do not observe the end-use operational tolerances, such as customer-side voltage limits or loading of limiting segments in the middle of a distribution feeder. Therefore, the operators monitor some observable operational parameters based on pre-defined associations of these parameters with the end-use tolerances, which for most of the time is a very conservative approach.

    When the operational models are enhanced with the AMI-supported data, and the model validation results are made available to the operational personnel, it can be expected that the personnel will adopt a new paradigm in monitoring the operations based on the dynamic limits calculated by the DA applications. This will significantly increase the benefits of DA applications, and this increase of the benefits can be attributed to the AMI. Figure 7 illustrates the lost benefits due to lack of confidence in secondary voltage models. The operator-installed bus voltage limit is defined for the peak load conditions and is kept all the time, preventing available voltage reduction at non-peak times.

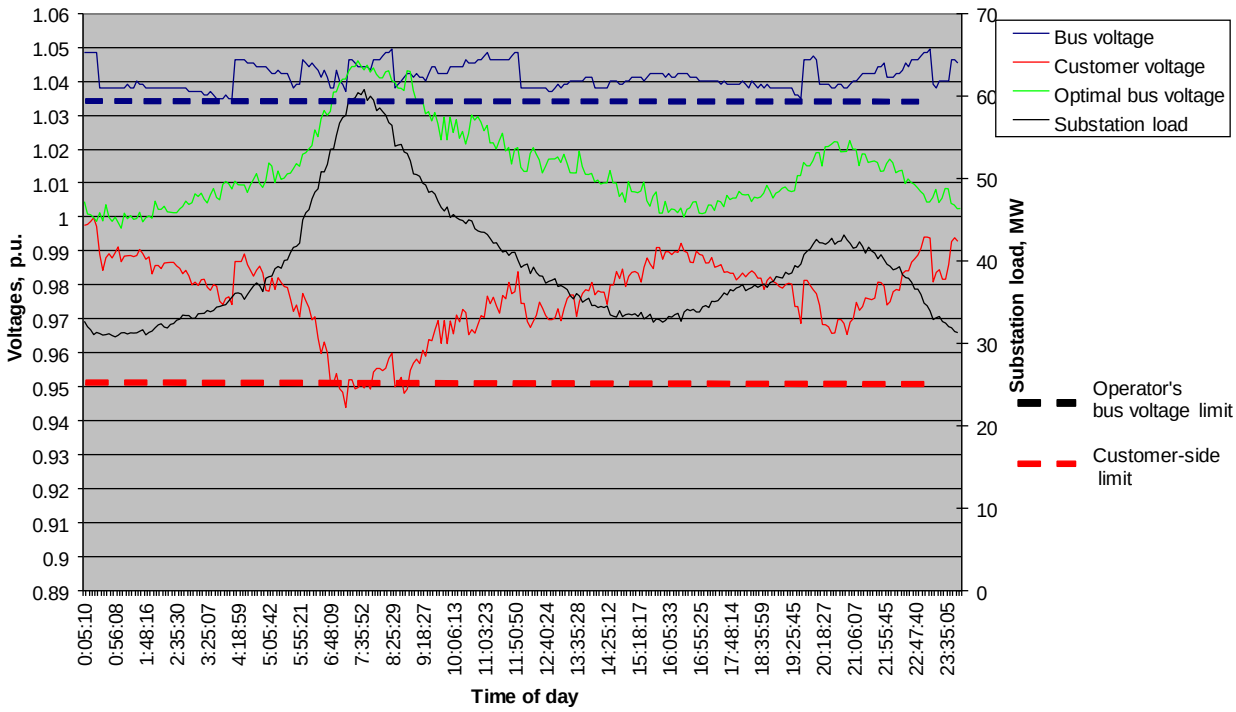

Figure 7. Impact of conservative bus voltage limit on energy conservation benefits.

18. Significant additional benefits of the optimizing DA applications can be expected due to the opportunity of integration of the controls of DR, partially executable via AMI systems, into controllable variables of DA applications [9]-[10]. Inclusion of DR in voltage-critical points provides additional room for load-reducing Volt/var optimization in a much bigger distribution grid. The additional load reduction received due to this additional room may significantly exceed the load reduction by the applied DR. To utilize such opportunities, the Volt/var/Watt Optimization (VVWO) application should be capable of issuing triggering signals to the AMI system to enable the DR in selected nodes.

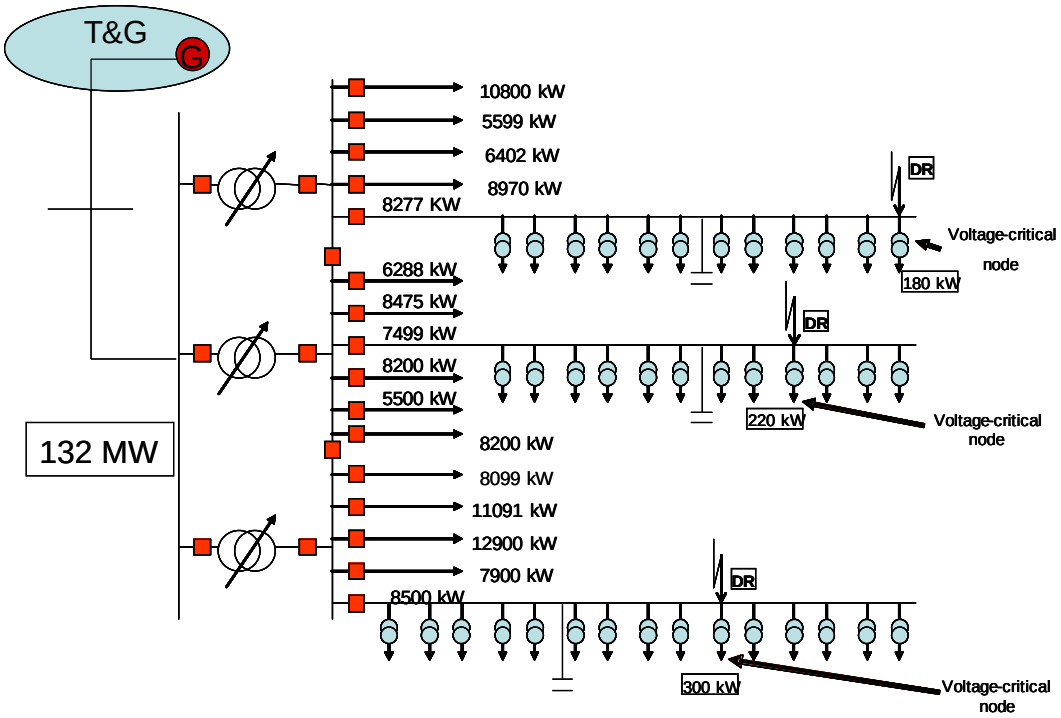

Figure 8. Benefits of accurately determined voltage–critical nodes with DR. Initial load reduction due to VVO = 1990 kW. Total DR = 67 kW; Additional Load Reduction by VVO = 614 kW. 30% increase of load reduction by VVO.

19. Inclusion of DR into controllable variables of the Service Restoration function may reduce the number and duration of customer interruptions and defer upgrades of the distribution facilities. To optimally utilize this potential, the adaptive models of the load with DR should be made available to the DA application, and the application should be capable of issuing triggering signals to the AMI system to be delivered to the selected devices.
20. Significant additional benefits of the Fault Location, Isolation and Service Restoration application can be obtained if the time of location, isolation and service restoration can be reduced and more loads can be restored. If the fault is cleared by a remotely monitored device, the fault detection time cannot be improved by AMI. If the fault is cleared by a non-monitored device, the AMI Last Gasp signal, if they are processed faster than the customer trouble calls, can reduce outage time.
21. The fault location time can be reduced if instantaneous voltage measurements at the last gasp can be made available in short time. Then the location can be determined based on the comparison of these measurements. In many cases, the time savings can be significant.
22. Optimal utilization of the resources of DR, DER, and Micro-grids (with some of them controlled via AMI) may reduce the number and duration of customer outages, especially, after the upgrades of the distribution system are deferred due to the presence of these resources.

23. For the location of the common protection device that cleared the fault, only few messages are needed (see the boxes with number 2 in Figure 9). Those are the messages from the few meters that can identify the common upstream protection device. These meters can be designated in advance as first reporters based on the current topology. This would reduce the volume of information exchange in the first moment after the fault and would expedite the transmittal of the critical information. Messages from other meters will be transmitted later.

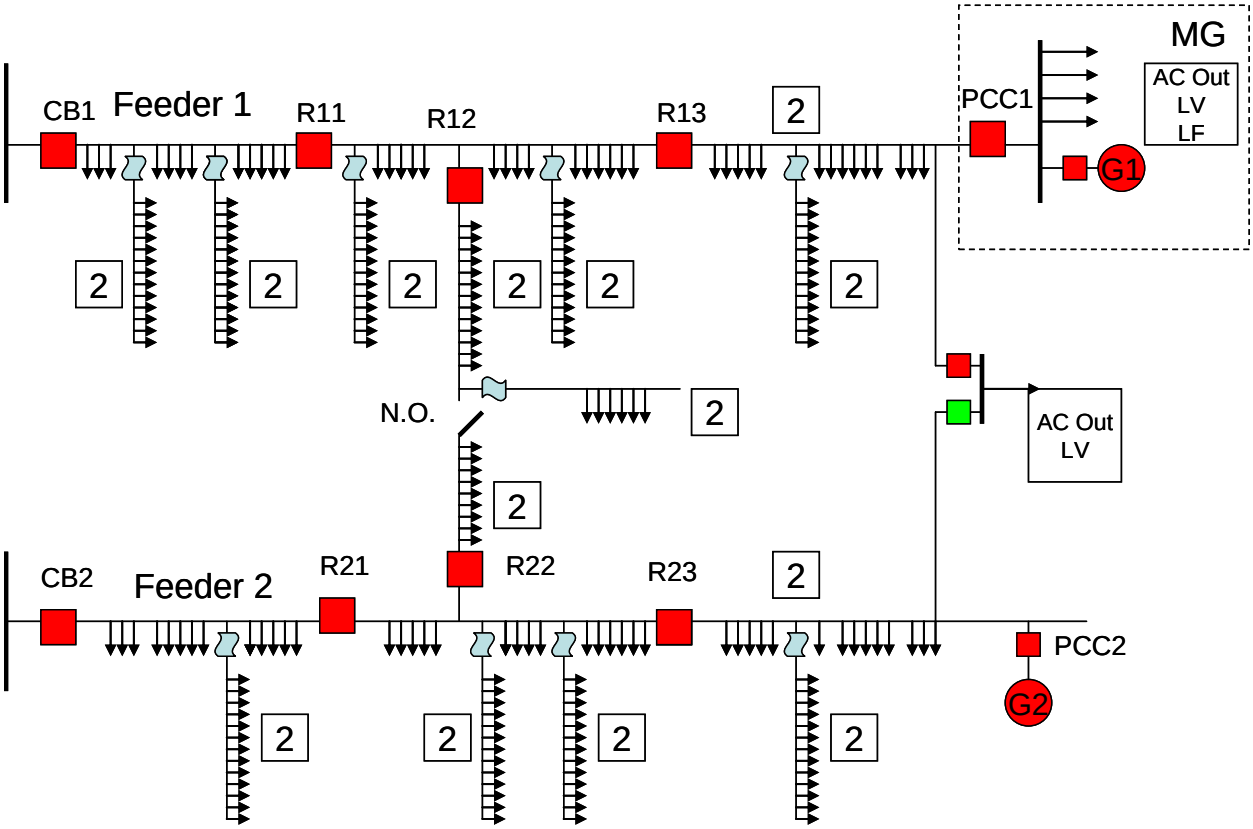

Figure 9. FLIR Benefits due to AMI (fault detection by bellwether meters)

24. In the Smart Grid environment, just detection of the fault does not provide sufficient information for Service Restoration. A more comprehensive assessment of the fault is needed immediately after the fault occurred, including the assessment of fault location and assessment of the situation with distributed generation and micro-grids, e.g., the ride-through modes of DER. To provide such assessment, aggregated adaptive models at the point of common coupling and inside the autonomous Micro-grid will be needed.

25. The most sophisticated sub-function of the Fault Location, Isolation and Service Restoration application is the Service Restoration sub-function. This sub-function is based on a number of "what-if" power flow calculations. The 'what-if" scenarios include alternatives involving feeder reconfiguration, sometimes with intermediate feeder paralleling for unloading backup feeders; DER starts or ramping, micro-grids management, intentional islanding, and DR. The difference in applying the DER, Micro-grids, and DR for service restoration is that the recommendations, which become a portion of the switching order, should be made for the future time, for which the restoration problem is to be solved. Corresponding predictive models of the loads and of the controllable systems will be needed for the look-ahead times.

26. The Service Restoration sub-function of FLIR seeks backup feeders with sufficient load transfer capacity to restore services to the healthy section of the faulted feeder. The transfer capcity of the backup feeders may be limited by the ampacity of the weakest segment of the feeder and/or by the additional voltage drop caused by the additional load. Hence, the voltage model and control errors may impact the transfer capacity and limit the restoration capability. Figure 10 illustrates the impact of these errors on the calculated transfer capacity. As seen in the figure, under some errors, no transfer capacity is available.

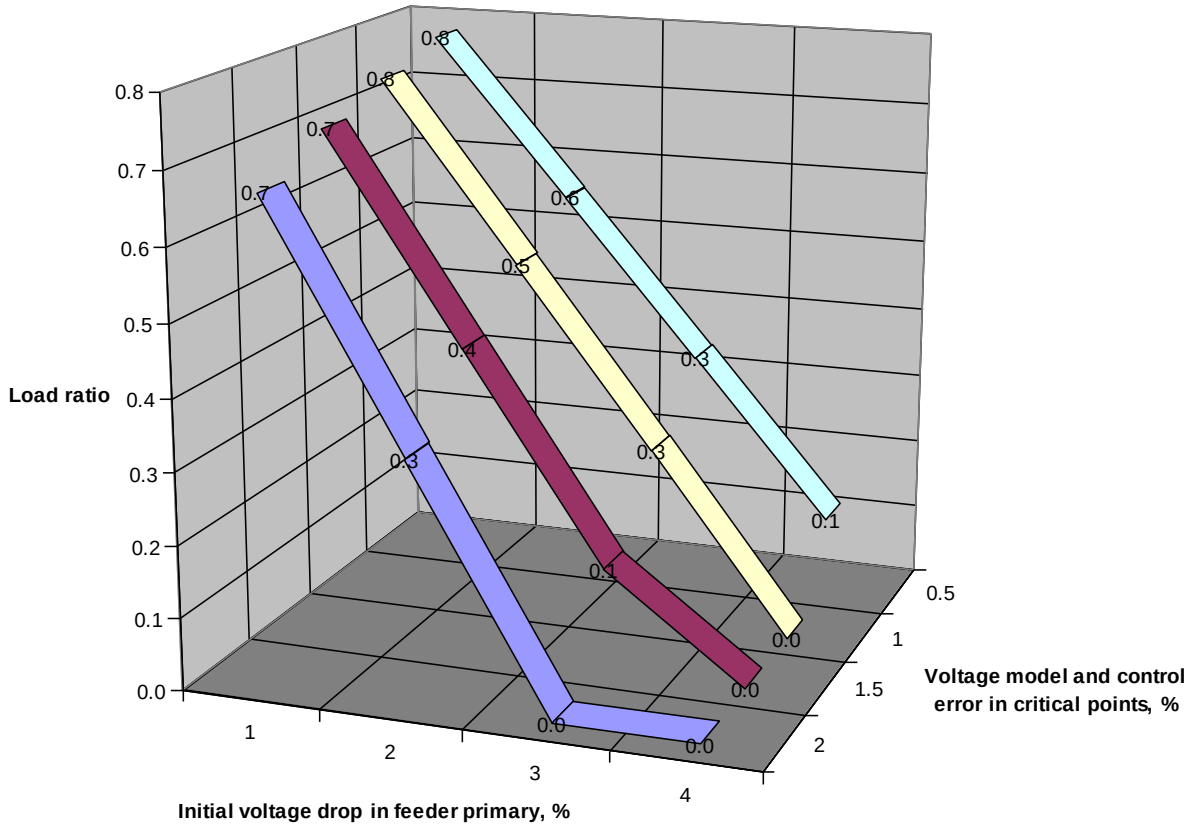

Figure 10. Ratio of transfer load over load of backup feeder after reconfiguration. Available emergency voltage drop in primary 5%

If there is no sufficient transfer available, feeder upgrades should be considered. Hence, the uncertainties in voltage modeling and control impact the time of feeder upgrades. Figure 11 illustrates the impact of the voltage errors on time of feeder upgrades. Under some errors, the upgrade is needed right away.

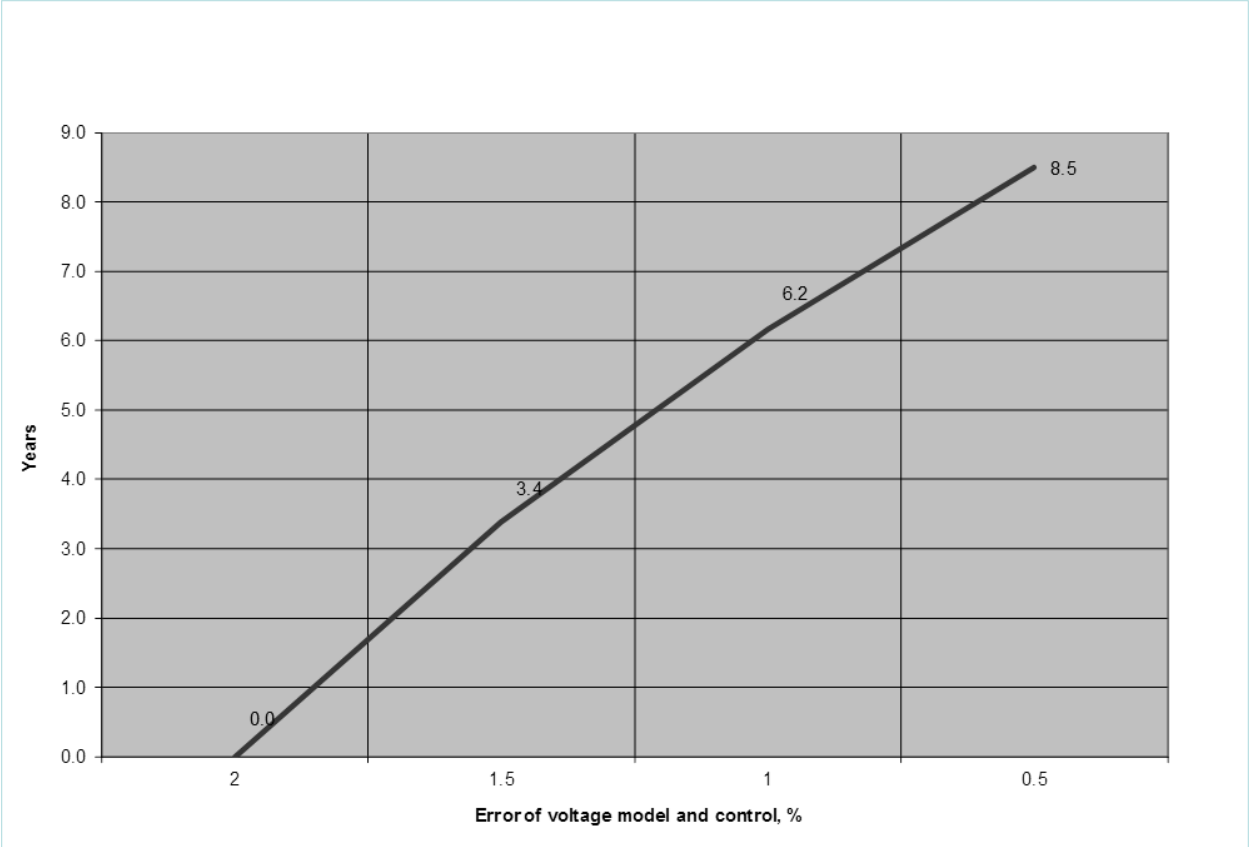

Figure 11. Time of feeder upgrade (years) vs errors in modeling and controlling voltage. Voltage drop limit = 5%. Load growth = 3%

27. Electrical islands can be crated after a fault in a distribution circuit. Some of the islands can be disconnected from the utility grid. If the available capacity of the DER in the island is greater than the load, and the control systems of the DER are capable of maintaining the balance between the demand and supply within the quality tolerances, then the service of the load will continue uninterrupted. If the load of the island exceeds the generation capacity, and the control system of the DER system is capable of managing the load to provide the balance between the demand and supply within the quality tolerances, part of the load will be disconnected and part will be reduced by demand-based frequency and voltage control systems. In some cases, there will not be sufficient load reduction available for keeping the balance with the generation, and then the entire island may be shot down. The misbalance may happen immediately after the fault occurred, and may happen later during the time of repair. The possibility of this happening should be foreseen by the DA application. The Data Management Systems, in addition to supporting updated adaptive load models on the distribution transformer and on the PCC levels, shall support predictive models of the balancing capabilities of the intentional islands for the expected time of repair. To support these models and the autonomous operations of the islands, the Smart Meter shall be able to accurately measure the frequency and voltage,
28. AMI-supported data and control capabilities may provide significant added benefits of advanced DA applications. The extent of the added values due to involvement of AMI

capabilities in the Advanced Distribution Automation depends on the design of the DA applications, on the contents of data gathered by the Smart Meters and similar systems, on the quality of information support by sources other than AMI and on the quality of control actions in the utility.

29. Most of the information support needed by DA from the AMI systems does not require direct information exchange between the DA applications and Smart Meters in near real time. However, advanced procedures for creating adequate adaptive and predictive models should be developed. To develop these models, combinations of AMI-supported data with data obtained from other information systems are needed.

3. References.

1. Benefits of Utilizing Advanced Metering Provided Information Support and Control Capabilities in Distribution Automation Applications, EPRI, Palo Alto: 2009 <1018984>.
2. Implementing Distribution Performance Optimization Functions that Integrate with Advanced Metering: AMI for Volt/Var Optimization. EPRI, Palo Alto, CA: 2010 1020091
3. Achieving Greater VVO Benefits through AMI Implementation, Nokhum Markushevich and Wenpeng Luan, Presented at IEEE PES GM 2011, Detroit
4. Development of Data and Information Exchange Model for Distributed Energy Resources, EPRI, Palo Alto, CA: 2010. 1020832. Available: http://my.epri.com/portal/server.pt?space=CommunityPage&cached=true&parentname=ObjMgr&parentid=2&control=SetCommunity&CommunityID=404&RaiseDocID=000000000001020832&RaiseDocType=Abstract_id
5. Distribution Grid Management (Advanced Distribution Automation) Functions. Use Case Description, submitted to the SGIP DEWG, PAP8, 2/2010. Available: http://collaborate.nist.gov/twiki-sggrid/pub/SmartGrid/PAP08DistrObjMultispeak/Distribution_Grid_ManagementSG_UC_nm.doc
6. PAP_8_DGM_Information_Exchange_Categorization_v3.xls, Available: http://collaborate.nist.gov/twiki-sggrid/bin/view/SmartGrid/PAP08DistrObjMultispeak
7. TBLM Use case, Available: http://collaborate.nist.gov/twiki-sggrid/bin/view/SmartGrid/TnD#Transmission_Bus_Load_Model_TBLM
8. Transmission Bus Load Model – the Bridge for Cross-Cutting Information Exchange between Distribution and Transmission Domains, Available: http://collaborate.nist.gov/twiki-sggrid/pub/SmartGrid/TnD/SGOC_presentation_to_SGIP_03-30_-2011a.pdf
9. Distribution Automation and Demand Response, N. Markushevich and A. Berman, DistribuTech2008, Tampa, Fl, January, 2008; North American Policies and Technologies, Electricity, Transmission & Distribution, 2008, Volume 20, No. 8 ;

2009, Volume 21, No. 1 http://www.electricity-today.com/download/issue8_2008.pdf; http://www.electricity-today.com/download/issue1_2009.pdf

10. Integrated Voltage, Var Control and Demand Response in Distribution Systems, Nokhum Markushevich and Edward Chan, IEEE PES, March 2009, Seattle

4. Appendix A

4.1 Major object models

The following is a summary of the information support requirements for the DMS application in the Smart Grid environment.

Four critical object/data models for the DMS applications are described in the tables below. The tables include the object/data models that can be significantly improved by AMI-supported data. The current state of these object/data models, the needed changes due to Smart Grid implementation and the expected benefits of these changes are addressed in the tables.

There are other object/data models used in DA applications such as models of local controllers, power electronics, etc., These are not typically closely associated with the AMI-supported information. These models are not addressed in this paper.

4.1.1 Nodal load model.

The attributes of the load models, their current state of their information support, the possible enhancement of it by using AMI and the expected benefits of these enhancements are presented in Table 1.

Table 1. Attributes of distribution nodal load models

Attribute	Current solution	Solution with AMI	Possible impact on the benefits
Number of customers connected to the node	Provided by GIS/CIS	Provided by GIS/CIS/MDMS	No change
Load category/type	Based on the dominant load category defined by experts	More and better refined load categories based on aggregation of similar individual load profiles and impacting factors	More accurate load models, more accurate results of power flow, more accurate optimization of the operations by DA applications
Typical load shapes for different times	Generalized load shapes per load category per season	More accurate load shapes dependent on impacting factors derived based on aggregation of similar individual load profiles and impacting factors	More accurate load models, more accurate results of power flow, more accurate optimization of the operations by DA applications
Scaling factors	Monthly average based on billing data for shifted monthly intervals	More accurate scaling factors based on individual revenue data and impacting factors	More accurate load models, more accurate results of power flow, more accurate optimization of the operations by DA applications
Power factor shapes or reactive load shapes	Expert estimates, typically constant values across the load profile	More accurate reactive load shapes dependent on impacting factors derived based on aggregation of similar individual reactive load profiles and impacting factors	More accurate load models, more accurate results of power flow, more accurate optimization of the operations by DA

Attribute	Current solution	Solution with AMI	Possible impact on the benefits
			applications
Confidence factor for State Estimation	Expert estimates, based on load category	Confidence factors will be assigned based on the estimated accuracy of the methodology for load modeling utilizing AMI data. Load models not supported by AMI will have significantly lower confidence factors.	More accurate load models, more accurate results of power flow, more accurate optimization of the operations by DA applications
Schedules of load-to-voltage dependencies separate for real load and reactive loads	Expert estimates based on field tests for a small number of selected busses or feeders	It is unlikely that field test for individual loads, even aggregated at the distribution transformer bus will provide credible results due to the dominant nature of load fluctuation caused by other than voltage factors. More accurate field tests can be performed, if instead of load aggregated at a substation bus or feeder, the aggregated loads of large groups of similar customers can be observed by summing the loads of such customers measured by AMI. With the implementation of smart appliances, calculations of the load-to-voltage dependences could be executed based on the characteristics of individual appliances and on their operations monitored by AMI.	More Accurate specific and aggregated Load-to-voltage dependences, more accurate assessments of DA application benefits, more accurate optimization of voltages and vars, more accurate assessment of dispatchable load
Incremental rate	Based on average rates for the load category	Individual rates for different times collected from the AMI system	More accurate assessment of the cost of operations; more accurate optimization of operating conditions
DR attributes	See table 2	See table 2	See Table 2
Distributed resources embedded in the customer loads	See table 3	See table 3	See table 3

Attribute	Current solution	Solution with AMI	Possible impact on the benefits
Power quality requirements	Standard voltage tolerances for different load categories No higher harmonics, voltage sags, momentary interruptions addressed	Individual voltage quality requirements associated with the individual smart meters. Higher harmonics, voltage sags, and momentary interruptions can be monitored by AMI	Better voltage quality due to better optimization of the operating conditions and distribution connectivity; better customer satisfaction, safer use of Volt/var control for load reduction, more accurate assessment of power quality.
Penalties (cost) for power quality violations	Expert estimates based on the utility policy on power quality	Individual contractual agreement between the utility and the customers. Provision of "super quality", which has narrower tolerances, may require additional cost paid by the customer. Relaxed power quality tolerances acceptable by some customers under certain conditions may result in rewards to the customer. These non-standard conditions can be set via AMI.	Better customer satisfaction, safer use of Volt/var control for load reduction, more accurate assessment of power quality, additional benefits from relaxed power quality requirements.

4.1.2 Demand Response (DR) Models

The attributes of the DR models, their current state of their information support, the possible enhancement of it by using AMI and the expected benefits of these enhancements are presented in Table 2

Table 2. Attributes of DR model

Attribute	Current solution	Solution with AMI	Possible impact on the benefits

Attribute	Current solution	Solution with AMI	Possible impact on the benefits
DR capacity function	An expert estimate of the percentage of initial load at the moment of application of the DR, dependent on triggering (price) signal	Individual adaptive model developed based on selected by customer DR program and statistics collected from AMI. When it comes to the model of the distribution nodal loads with DR, the behavior of such load can be modeled based on some statistics collected via AMI, or can be based on monitoring the operations of smart appliances via HAN under different conditions delivered to the customer via AMI. For instance, if smart thermostats are changing their settings dependent on the price signal delivered to the customer smart meter, the cycling of air conditioners and heaters will change differently at different customers, at different times, under different ambient conditions. As a result, the load profiles will change differently even under the same price signal. Based on the associations of the impacting factors with the load profiles obtained from AMI, adaptive models of the DR can be developed. The adaptive model of DR shall also reflect the changes of the DR during the required time of DR, making the model a function of time. For the distribution transformer load model the individual models shall be aggregated.	More accurate load models, more accurate results of power flow, more accurate optimization of the operations by DA applications
DR Triggers	Different "price" levels can be associated with different percentage	With the individual triggers of DR known through the DR/Load management systems, the statistical data collected via AMI may assist in determining the customer reactions to the particular trigger	More accurate load models, more accurate results of power flow, more accurate optimization of

Attribute	Current solution	Solution with AMI	Possible impact on the benefits
	of aggregated load under DR	(the timing, duration, sustainability, and probability of execution).	the operations by DA applications.
Controllability of DR by DA applications	N/A	With AMI, the triggers for enabling the DR in selected nodes can be generated by DA applications and executed by the controlling abilities embedded in AMI, if any [8 and 9]	Greater benefits of the optimizing DA applications due to integration of DR into the applications.

4.1.3 Modeling Distributed Energy Resources (DER) and Micro-grids

Assuming that the stand-alone and large DER and Micro-grid have separate from AMI communication means, the current state of their information support for DER embedded in the customer loads, the possible enhancements of it by using AMI, and the expected benefits of these enhancements are presented in Table 3

Table 3. Attributes of DER and Micro-grids models

Attribute	Current solution	Solution with AMI	Possible impact on the benefits
Distributed resources embedded in the customer loads attributes	Currently not represented, implicitly included in the load shape and scaling factor	Individual adaptive model developed based on provided by the customer information and statistics collected from AMI. Fluctuation characteristics of weather-sensitive DER (wind, solar) can be derived based on AMI as dependencies on parameters provided in the weather forecast and reports	More accurate load models, more accurate results of power flow, more accurate optimization of the operations by DA applications
Higher harmonic and THD related to the DER operations	N/A	Higher harmonics characteristics as dependencies of operating conditions can be developed based on AMI.	More accurate power quality analysis and more efficient mitigation of power quality violations

Attribute	Current solution	Solution with AMI	Possible impact on the benefits
Contribution of DER to the kW, kvar and to the Load-to-Voltage dependencies of the load	N/A	Can be made available from the analysis of the statistics of AMI measurements	More accurate models and optimization for look-ahead conditions.

4.1.4 Model of Low Voltage Circuit Equivalent

The secondary circuit equivalent is a critical component of the model used for IVVWO. The object model of the low voltage circuit equivalent is described in Table 4.

Table 4. Attributes of the Low Voltage Circuit Equivalent

Attribute	Current solution	Solution with AMI	Possible impact on the benefits
Voltage drop in the LV circuits (from the distribution transformer to the load), %	Based on expert estimates of the percent voltage drop under given loading of the distribution transformer and resistance/reactance ratio.	The actual voltage drops can be derived, if smart meters (SM) are installed at the secondary buses of the distribution transformers. If there are no SMs at the transformer buses, then the calculated by the Distribution State Estimation voltages at these buses can be taken as references and the voltage drop in the secondaries can be derived as a function of the distribution transformer load based on historic load and voltage measurements provided by AMI.	The voltage drop in the LV circuits is a significant component of the voltage drop between the source of supply and the customer terminals. More accurate models of the voltage drops in LV circuits may result in significant additional benefits of DA applications.
Energy losses in the LV circuits, %	Calculated based on the derived resistance from the expert estimated voltage drop and r/x ratio	An empirical loss calculation method based on the derived voltage drop using AMI-supported statistics and an expert estimate of the r/x ratio can be considered.	More accurate calculation of losses in LV may insignificantly increase the accuracy of the power flow calculations, but may be important for determining

Attribute	Current solution	Solution with AMI	Possible impact on the benefits
			commercial energy losses.
Reactive power losses, %	Calculated based on the derived resistance from the expert estimated voltage drop and r/x ratio	The same as above	More accurate calculation of reactive losses in LV may not increase the accuracy of the power flow calculations significantly.

4.2 Major actors

The major actors involved in the integration of AMI with Distribution Automation are presented in Table 5.

Table 5. Major Actors

Actor	Actor Type	Description	Functionality related to DA applications
Smart Meter	Device	Advanced electric revenue meter capable of two-way communications with the utility. Serves as a gateway between the utility, customer site, and customer's load controllers. Measures, records, displays, and transmits data such as energy usage, generation, text messages, and event logs to authorized systems and provides other advanced utility functions.	Measurements and storage of: • kW and kvar • kWh • Load profiles • Interval average voltages • Instantaneous voltages with time stamps • Instantaneous frequency with time stamps • Weather data. • Services: • Last Gasp/AC Out • DR functions • Information for customers and third parties • Communications with HAN
AMI Data Management System	System	Gathers, validates, estimates, and permits processing of meter data. Stores this data for a given amount of time before it goes to the Meter Data Warehouse and makes the data available to authorized	Derives aggregate at the distribution transformer load profiles. Interfaces with load model processor and secondary equivalent processor. Communicates either directly or through a

		systems	network Management system with the Smart meters Communicates with DA applications
Load model processor	Application	Derives representative adaptive load models for clusters of similar loads based on AMI data and other impacting factors for the use in DA applications. Defines the clusters of similar loads	Communicates with AMI DMS and with DA applications
Secondary equivalent processor	Application	Derives dependencies of critical voltage drop in the secondaries of the nodal load	Communicates with AMI DMS and DA applications
DR System	System	Executes and monitors DR resources. Sends out DR event notifications to Smart Meters and customers.	Stores customers DR programs, communicates with Load model processor, communicates with DA applications
DOMA	Application	Distribution Operation Model and Analysis. An advanced DA application. Runs periodically and by event, models near real-time power low/state estimation. Provides situational awareness of distribution operations, Provides background models for other DA applications	Utilizes AMI supported adaptive nodal load models and secondary equivalents Communicates with Load model processor and with Secondary equivalent processor
IVVWO	Application	Integrated Volt/var/Watt Optimization, an advanced DA application, runs	Communicates with DOMA, DR, Customer EMS and PCC

		periodically and by event, Optimizes states of voltage, var, DER, Micro-grid controllers and DR means;	interconnection controllers
FLIR	Application	Fault Location, Isolation and Service Restoration, an advanced DA application, identifies and locates the fault, isolates the faulted element from healthy sections and restores services to the customers connected to the healthy sections	Communicates with DOMA, AMI DMS, DR System, Customer EMS, and PCC interconnection controllers. Uses the Last Gasp service of AMI.

4.3 Communication interfaces supporting AMI-related information exchange

Table 6. Attributes of information exchange between major actors

Interface #	Source	Recipient	Contents	Volume	Timing
1	Smart Meter	AMI DMS (Through AMI Headends)	Max W and var var under max W (for determining the degree of uncertainty) W under maximum var (for determining the degree of uncertainty) Whours Volt under max W (for determining the degree of uncertainty) Volt under max var Load profiles (interval data) Interval average voltages *Weather data* DR triggers received with timestamps; *Commands issued for DR (thermostat, appliances, DER, Storage). (Needed for load modeling)* Harmonic spectrum THD PF Sags Swells *Flicker*	Large	Once a day

1	Smart Meter	AMI DMS	Instantaneous voltages with timestamps *(predefined by time or conditions)-* Instantaneous frequency from dedicated meters in autonomous mode of Micro-grid with timestamps Last Gasp/AC Out *Instantaneous Voltage at the Last Gasp (for fault location)*	Small to average	Last gasp -immediately from selected first-reporters, Instantaneous voltages within minutes after fault, Instantaneous frequency from dedicated meters – report by exception
1	MDMS	Smart Meter	Real-time prices DR triggers and amount Data requests	Small to average	Immediately after change
2	Customer EMS	MDMS	Aggregated from Smart Meters: kW and kvar kWh Load profiles Interval average voltages Weather data. DR triggers received with timestamps Commands issued for DR (customers' Smart Meters, thermostat, appliances, DER, Storage).	Small to average	Once a day

2	Customer EMS	MDMS (including Last Gasp service)	Lowest instantaneous voltages from included Smart Meters Instantaneous frequency Last Gasp/AC Out from selected Smart Meters	Small to average	Last gasp -immediately from selected first-reporters, Instantaneous voltages within minutes after fault, Instantaneous frequency – report by exception
2	MDMS (including Last Gasp service)	Customer EMS	Real-time prices DR triggers and amount Data requests	Small to average	Immediately after change
3	Micro-grid interconnection controller in PCC	MDMS	Aggregated for Micro-grid Net, load and generation kW and kvar Net, load and generation kWh Net, load and generation load profiles Interval average voltages from selected Smart Meters Weather data DR triggers received with timestamps Commands issued for DR (customers' Smart Meters, thermostat, appliances, DER, Storage), Protection settings and settings for frequency and voltage control for connected and for autonomous modes of operations Operational limits	Small to average	Once a day

			O&M cost functions Other data needed for current and predictive model of Micro-grid operations		
3	Micro-grid interconnection controller in PCC	MDMS	Lowest instantaneous voltages from included Smart Meters Instantaneous frequency Last Gasp/AC Out from selected Smart Meters	Small to average	Last gasp -immediately from selected first-reporters, Instantaneous voltages within minutes after fault, Instantaneous frequency – report by exception in autonomous mode of operations
3	MDMS	Micro-grid interconnection controller in PCC	Real-time prices DR triggers and amount Disconnection command for intentional islanding Desired kW and kvar set points Desired voltage set points Data requests	Small to average	Immediately after change
4	DER &Controller	MDMS	Generation kW and kvar Generation kWh Generation profiles Interval average voltages Weather data	Small to average	Once a day

			Generation change triggers received with timestamps; Active protection settings and settings for voltage control in the connected mode of operations and voltage and frequency control settings for island mode of operations, Capability curve Synchronization settings O&M cost functions		
4	DER &Controller	MDMS	Lowest instantaneous voltages before disconnection Instantaneous frequency in island mode Last Gasp/AC Out or protection actions	Small	Immediately after change
4	MDMS	DER &Controller	Real-time prices Desired kW and kvar set points Desired voltage set points Data requests Synchronization commands	Small	Immediately after change
5	MDMS	Load model Processor	kW and kvar profiles for every day Impacting factors with time stamps Weather DR with start and stop times Other related events with timestamps	Large	Once a day

6	Load model Processor	DOMA	List of nodes in clusters Name of clusters Representative nodal load models for clusters of similar loads	Average	Once a day
7	MDMS	Secondary equivalent processor	Daily kW and kvar load profiles from individual Smart meters and aggregated at the distribution transformer load profiles Daily profiles of interval-average voltages	Large	Once a day
8	Secondary equivalent processor	DOMA	Dependencies of critical voltages on nodal loads Dependencies of losses in secondaries on nodal loads Request for modeled voltages at the secondary buses of distribution transformers	Large	After significant change (once a month or less frequent)
8	DOMA	Secondary equivalent processor	Modeled voltages at the secondary buses of distribution transformers	Large	On request by Secondary Equivalent processor (once a month or less frequent)
9	DOMA	VVWO	All component of operation models (can be integrated in VVWO)	Large	Every run of DOMA and VVWO (e.g. every 5-15 min.)
10	VVWO	DR System	Triggers of DR for selected nodes Desired amount of DR in selected nodes		
10	DR System	VVWO	Available DR per node Constraint of DR per node	Average	After significant change
11	DR System	Smart Meters;	Triggers of DR for selected nodes	Small	In times of peak load reduction and after faults

		Customer EMS; Micro-grid controller; DER controller	Desired amount of DR in selected nodes Triggers of DR for aggregated loads of Micro-Grid to Micro-grid controllers Triggers of DR for aggregated loads to Customer EMS		for service restoration
12	VVWO	Micro-grid interconnection controller in PCC	Triggers of DR for selected nodes in connected mode Desired amount of DR in selected nodes Desired net kW and kvar exchange Desired settings or mode of operation for var or voltage control	Small	Up to every run of VVWO
12	Micro-grid interconnection controller in PCC	VVWO	Available DR per PCC Constraint of DR per PCC Constraints of kW and kvar exchange Constraints on voltage control	Small	After significant change
13	VVWO	DER controller	Desired state of DER (On/Off) Desired kW and kvar generation Desired settings or mode of operation for var or voltage control	Small	Up to every run of VVWO
13	DER controller	VVWO	Actual state of DER Actual kW and kvar Schedule of kW and kvar for look-ahead times Actual settings and mode of operation for var and voltage control	Small	Up to every run of DOMA

14	DOMA	FLIR	All component of operation models (can be integrated in FLIR)	Large	Every run of DOMA (e.g. every 5-15 min.)
15	MDMS	FLIR	Last Gasp/AC Out Instantaneous voltages	Small to average	Last Gasp – immediately lock out Instantaneous voltages – within minutes after fault
16	FLIR	DR System	Triggers of DR for selected nodes Desired amount of DR in selected nodes	Small	After fault, and after repair
16	DR System	FLIR	Available DR per node Constraint of DR per node	Small to average	After significant change
17	FLIR	Micro-grid interconnection controller in PCC	Desired state of Micro-grid (Connected or autonomous) Triggers of DR per Micro-grid Desired amount of Demand per Micro-grid Desired net kW and kvar exchange	Small	After fault and after repair
17	Micro-grid interconnection controller in PCC	FLIR	Available DR per PCC Constraint of DR per PCC Constraints of kW and kvar exchange	Small	After significant change
18	FLIR	DER controller	Desired state of DER (On/Off) Desired kW and kvar generation	Small	After fault and after repair

18	DER controller	FLIR	Actual state of DER Actual kW and kvar Schedule of kW and kvar for look-ahead times Protection settings	Small	After significant change
19	DOMA	AMI DMS	List of possible voltage-critical points Modeled voltages for comparison with selected measurements	Small	After significant change
19	AMI DMS	DOMA	Results of comparison	Small	After significant change
20	DMS	TBLM	Aggregated Distribution Operation model	Average	Periodically and by event
21	TBLM	DMS	Requests from EMS applications to DMS	Small	Occasionally

The diagram of logical interfaces between actors for utilizing AMI data in DA applications is presented in Figure 1. Only actors and interfaces involved in the information exchange of AMI supported data are presented in this figure.

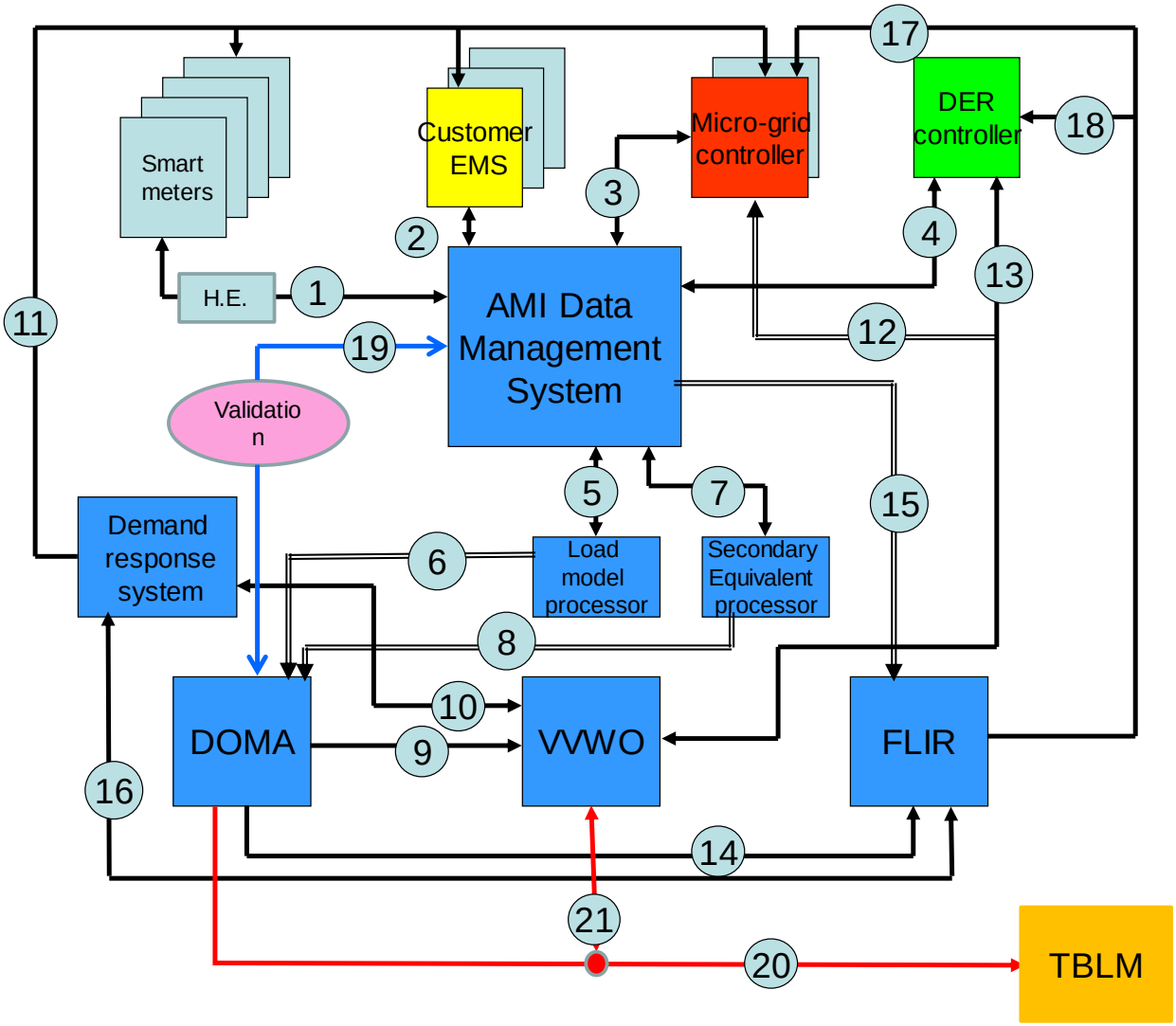

Figure 12. Major actors and interfaces involved in AMI-supported information exchanges.

5. Appendix B. Information exchange between AMI and DMS (Excerpt from [6]).

Table 7

#	Source	Recipient	Timing	Network	Model	Type of Data	Contents of information	Availability of Data Contents
1	AMI	Data	Upon	Enterprise	61850	File	Harmonics,	Comtrade

#	Source	Recipient	Timing	Network	Model	Type of Data	Contents of information	Availability of Data Contents
	Headend	Management System	request	Bus			spectrum	
2	Smart Meter	AMI Headend	Upon request	AMI	ANSI	File	Harmonics, spectrum	In ANSI C12.19
3	Smart Meter	AMI Headend	Upon request	AMI	ANSI	File	Harmonics, THD	In ANSI C12.19
4	Smart Meter	AMI Headend	On demand	AMI	ANSI	Power data	Instantaneous frequency from dedicated meters in autonomous mode of Micro-grid on demand	In ANSI C12.19
5	Smart Meter	AMI Headend	On demand	AMI	ANSI	Power data	Instantaneous vars on demand	In ANSI C12.19
6	Smart Meter	AMI Headend	Daily	AMI	ANSI	Power data	Instantaneous voltage at the time of vars max	In ANSI C12.19
7	Smart Meter	AMI Headend	Daily	AMI	ANSI	Power data	Instantaneous voltage at the time of Watt max	In ANSI C12.19
8	Smart Meter	AMI Headend	Daily	AMI	ANSI	Power data	Instantaneous Voltage within the interval-max	In ANSI C12.19
9	Smart Meter	AMI Headend	Daily	AMI	ANSI	Power data	Instantaneous Voltage within the interval-min	In ANSI C12.19
10	Smart Meter	AMI Headend	On demand	AMI	ANSI	Power data	Instantaneous voltages beyond given limits	In ANSI C12.19
11	Smart Meter	AMI Headend	On demand	AMI	ANSI	Power data	Instantaneous voltages on demand from given nodes	In ANSI C12.19
12	Smart Meter	AMI Headend	On demand	AMI	ANSI	Power data	Instantaneous Watts on demand	In ANSI C12.19
13	Smart Meter	AMI Headend	Daily	AMI	ANSI	Power data	Interval average voltages	In ANSI C12.19
14	Smart Meter	AMI Headend	Upon event	AMI	ANSI	Outage	Last Gasp/AC Out	In ANSI C12.19
15	Smart	AMI	At	AMI	ANSI	Configuration	Meter ID	In ANSI

#	Source	Recipient	Timing	Network	Model	Type of Data	Contents of information	Availability of Data Contents
	Meter	Headend	installation					C12.19
16	Smart Meter	AMI Headend	Upon request	AMI	ANSI	File	Flicker (CBEMA curve, or EPS-given curve) ?	**Probably not in ANSI C12-19**
17	Smart Meter	AMI Headend	Periodic	AMI	ANSI	Event log	Commands issued for Demand Response (to thermostat, appliances, DER, Storage).	*Needs further definition*
18	AMI Headend	Smart Meter	At installation, with occasional updates	AMI	ANSI	Configuration	Designation of the first reporters	*Needs further definition*
19	Smart Meter	AMI Headend	Daily	AMI	ANSI	Meteorology	Ambient temperature within time interval	**Not for electric meters in ANSI C12-19**
20	Smart Meter	AMI Headend	Daily	AMI	ANSI	Meteorology	Humidity within time interval	**Not for electric meters in ANSI C12-19**
21	Smart Meter	AMI Headend	Daily	AMI	ANSI	Power data	PF for TOU interval …N	**Not directly. Can be derived based on ANSI C12-19 data in the AMI DMS**
22	Smart Meter	AMI Headend	Daily	AMI	ANSI	Power data	PF for TOU interval 1	**Not directly. Can be derived based on ANSI C12-19 data in the AMI DMS**
23	Smart Meter	AMI Headend	Daily	AMI	ANSI	Power data	PF for TOU interval 2	**Not directly. Can be derived based on ANSI C12-19 data in the AMI DMS**
24	Smart Meter	AMI Headend	Daily	AMI	ANSI	Power data	Power factor within time	**Can be derived**

#	Source	Recipient	Timing	Network	Model	Type of Data	Contents of information	Availability of Data Contents
							interval	**based on Watt and VA, which are available**
25	Smart Meter	AMI Headend	Daily	AMI	ANSI	Power data	VA-hours during time interval	Unknown if in model
26	Smart Meter	AMI Headend	Daily	AMI	ANSI	Power data	vars max at the time of Watt max	**Not directly supported. Can be derived from available data for interval data**
27	Smart Meter	AMI Headend	Daily	AMI	ANSI	Power data	vars max within time interval	Unknown if in model
28	Smart Meter	AMI Headend	Daily	AMI	ANSI	Power data	vars-hours during time interval	**Not available (needed for determining the degrees of uncertainty**)
29	Smart Meter	AMI Headend	Upon request	AMI	ANSI	Statistics	Voltage imbalance (statistics?) - for three-phase meters	In ANSI C12.19
30	Smart Meter	AMI Headend	Daily	AMI	ANSI	Power data	Voltage sags	In ANSI C12.19
31	Smart Meter	AMI Headend	Daily	AMI	ANSI	Power data	Voltage swells	In ANSI C12.19
32	Smart Meter	AMI Headend	Daily	AMI	ANSI	Power data	Watt max at the time of var max	**Not available (needed for determining the degrees of uncertainty**)
33	Smart Meter	AMI Headend	Daily	AMI	ANSI	Power data	Watts for TOU interval …N	In ANSI C12.19
34	Smart Meter	AMI Headend	Daily	AMI	ANSI	Power data	Watts for TOU interval 1	In ANSI C12.19
35	Smart	AMI	Daily	AMI	ANSI	Power data	Watts for	In ANSI

#	Source	Recipient	Timing	Network	Model	Type of Data	Contents of information	Availability of Data Contents
	Meter	Headend					TOU interval 2	C12.19
36	Smart Meter	AMI Headend	Daily	AMI	ANSI	Power data	Watts Max	In ANSI C12.19
37	Smart Meter	AMI Headend	Daily and on request	AMI	ANSI	Power data	Watts-hours during time interval	In ANSI C12.19