# AMI Information Support for Transmission and Distribution Operations

Nokhum Markushevich

Presentation to TnD DEWG

02/29/2012

# Introduction

- Advanced Distribution Automation applications are based on near real-time computer-aided models of distribution operations
- The models for advanced DA applications must reflect not only the current state of the object but also support the look-ahead states dependent on changing conditions. Hence the models shall be predictive and adaptable.
- The fundamental model for the advanced DA applications is the power flow/state estimation model down to the equivalents of the low voltage circuits. 1
- The critical results of the power flow are the loading of the circuit elements and **the voltages at the designated buses, predominantly at the customer terminals.**

# Background components of TnD Object/Data Models

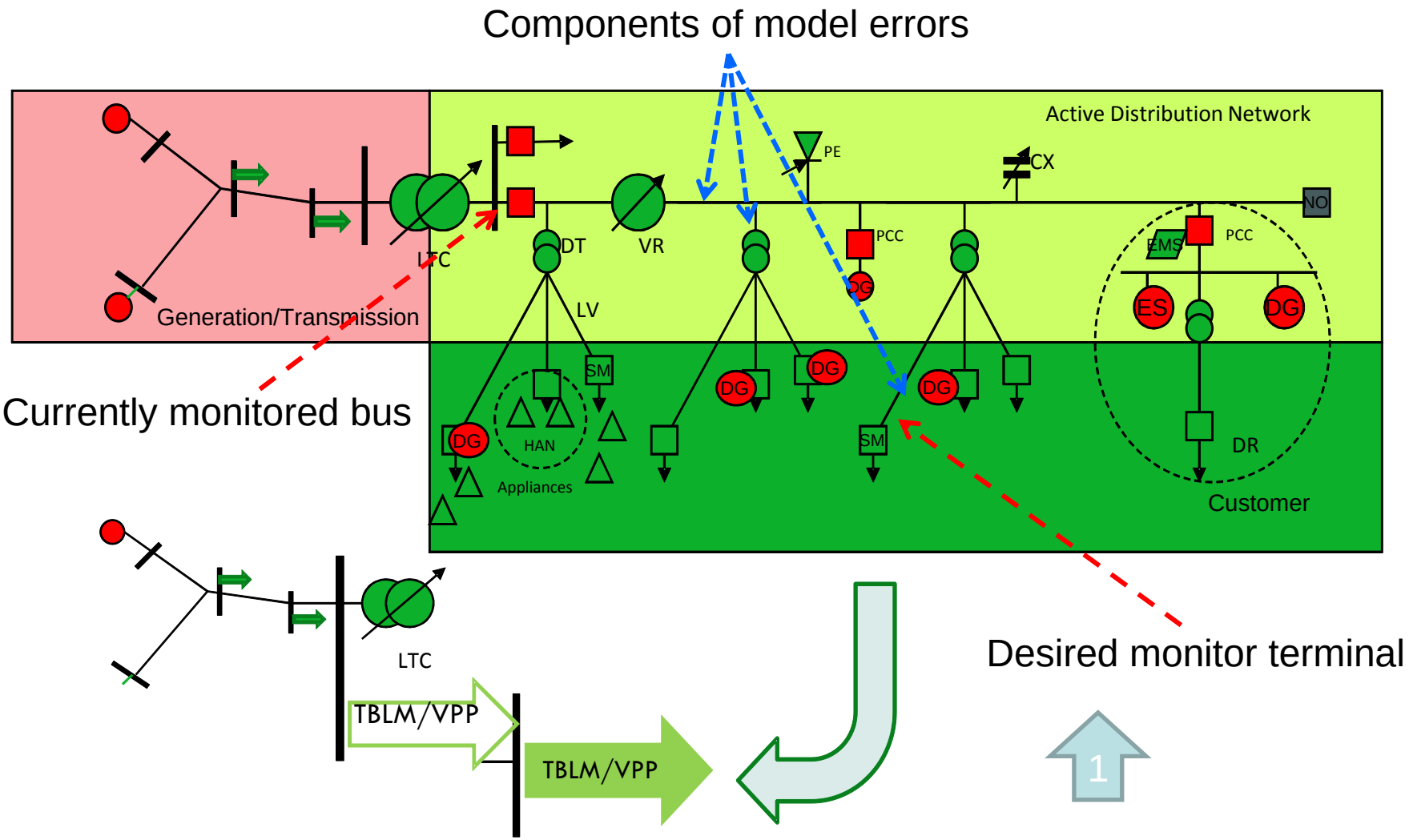

# Component Errors in Voltage Modeling

- Measurements of the reference voltages
- Modeling the voltage transformation by voltage regulators and other volt/var controlling devices (e.g., bandwidth errors)
- Modeling the voltage drops in the feeder primaries
- Modeling the voltage drops in distribution transformers
- Modeling the voltage drops in the secondary (LV) circuits

➢ Of the 5 types of errors listed above, the last three are closely related to the AMI-supported information

❖ Assuming random independent component errors, the composite error is defined as follows:

$$\Delta Vlv = [(\Delta Vref)^2 + (\Delta Vmv)^2 + (\Delta VDdt)^2 + (\Delta VDsec)^2]^{0.5}$$

# In the most loaded segments the errors in the voltage drop calculated by DSE do not exceed 0.1% of nominal voltage

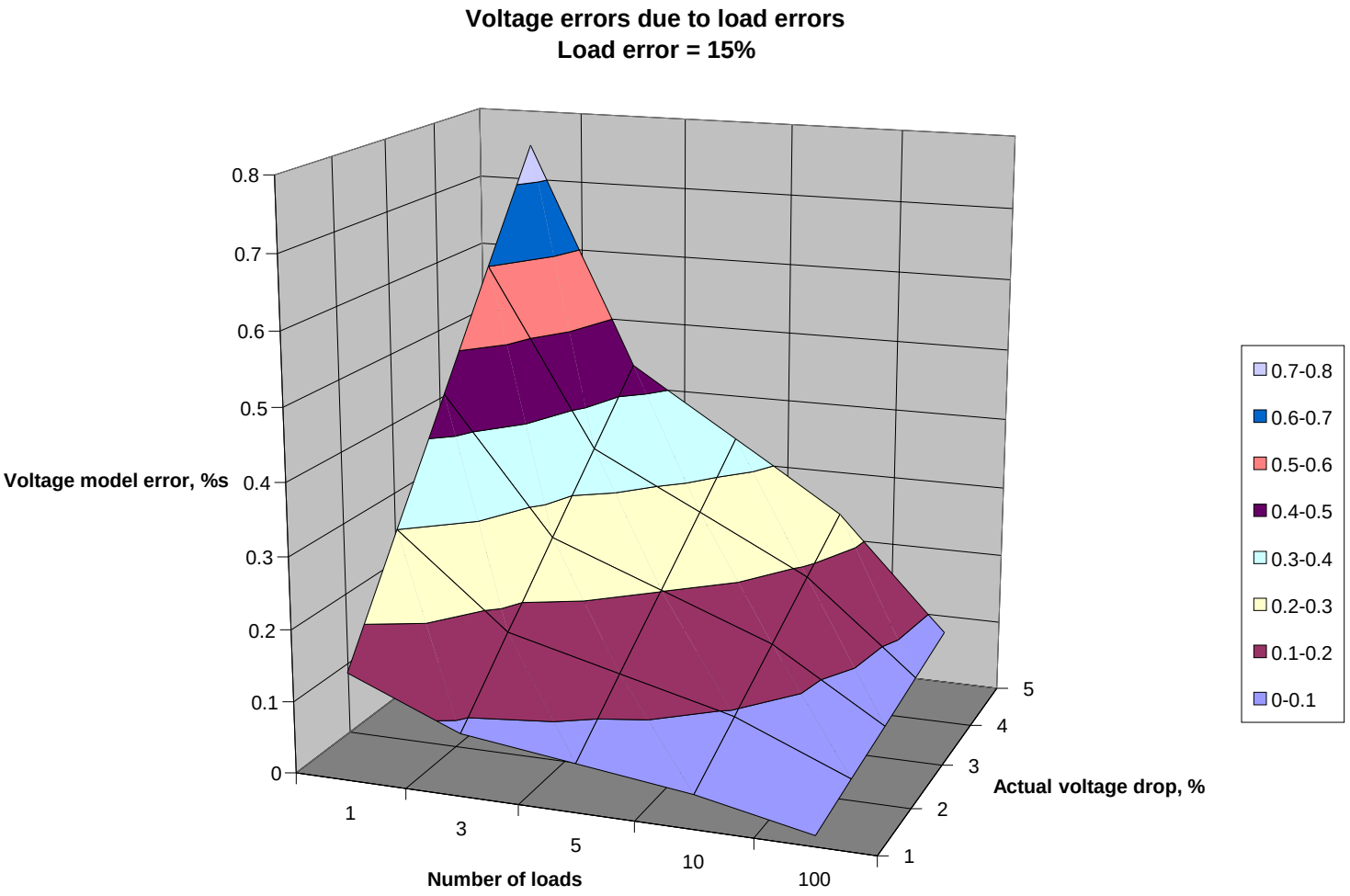

# Example histogram of DT load errors, % of tr-r kVA, max utilization≈70%

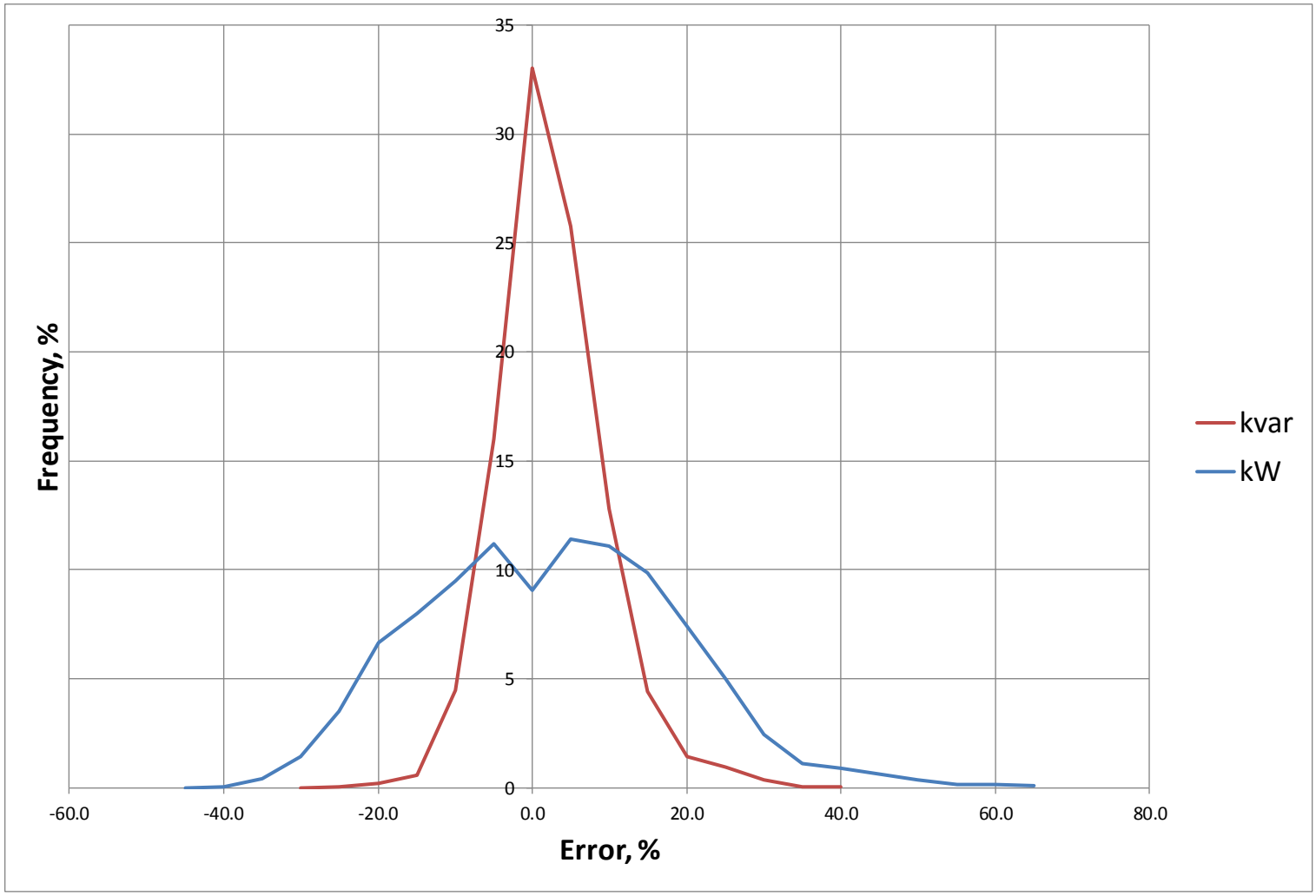

# Example histogram of errors in modeling 3-phase DT voltage drop

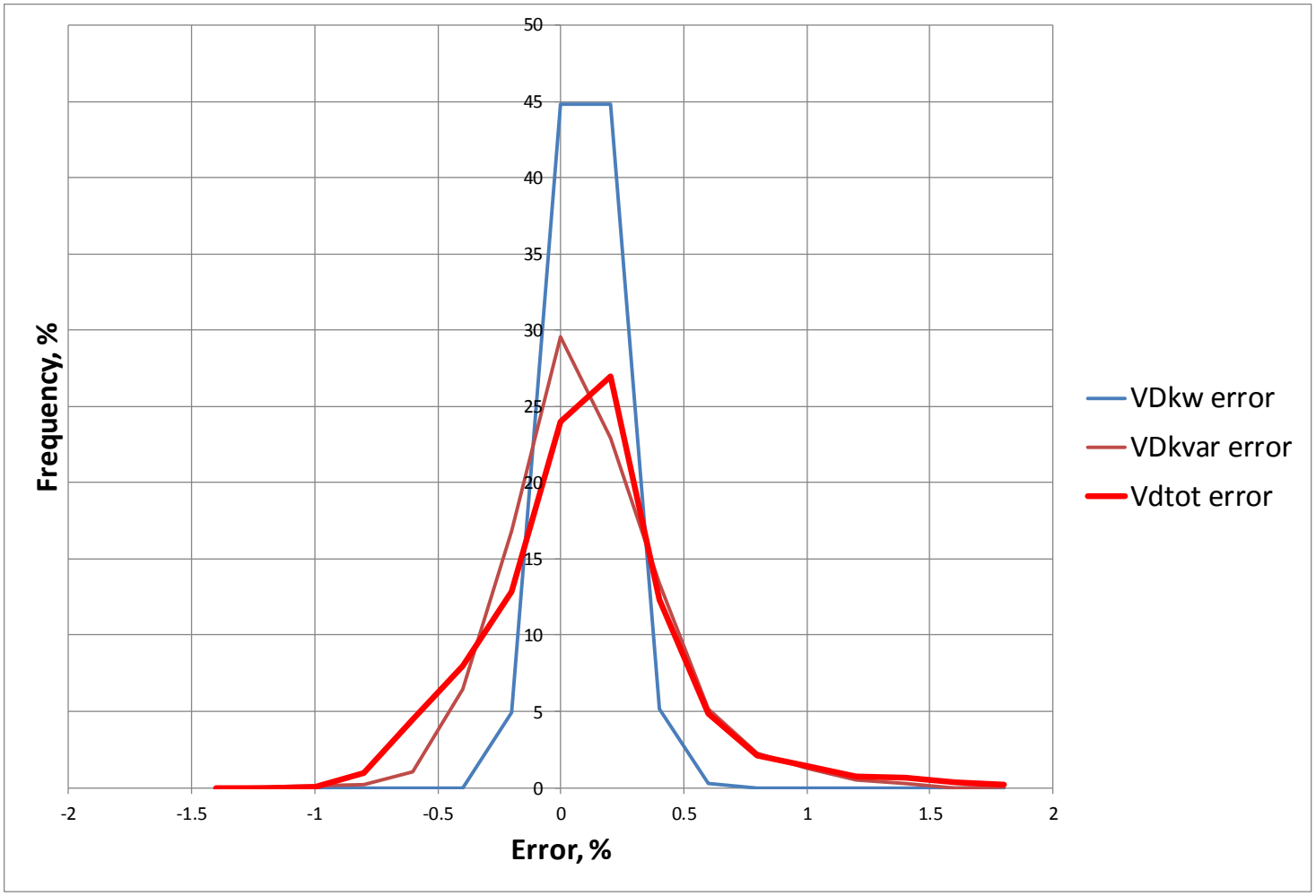

# Voltage drop error in three-phase distribution transformer vs load model accuracy

| | | kvar errors, p.u. of kVA | | | | | | | | | | |
|---|---|---|---|---|---|---|---|---|---|---|---|---|
| | | -0.25 | -0.2 | -0.15 | -0.1 | -0.05 | 0 | 0.05 | 0.1 | 0.15 | 0.2 | 0.25 |
| kW errors, p.u. kVA | -0.25 | | | | | -0.43 | -0.20 | 0.02 | 0.25 | 0.476 | | |
| | -0.2 | | | | | -0.39 | -0.16 | 0.07 | 0.29 | | | |
| | -0.15 | | | | | -0.35 | -0.12 | 0.11 | 0.34 | | | |
| | -0.1 | | | | | -0.31 | -0.08 | 0.15 | 0.38 | | | |
| | -0.05 | | | | -0.50 | -0.27 | -0.04 | 0.19 | 0.42 | | | |
| | 0 | | | | -0.46 | -0.23 | 0.00 | 0.23 | 0.46 | | | |
| | 0.05 | | | | -0.42 | -0.19 | 0.04 | 0.27 | 0.50 | | | |
| | 0.1 | | | | -0.39 | -0.15 | 0.08 | 0.31 | | | | |
| | 0.15 | | | | -0.35 | -0.12 | 0.12 | 0.35 | | | | |
| | 0.2 | | | | -0.31 | -0.08 | 0.15 | 0.39 | | | | |
| | 0.25 | | | | -0.28 | -0.04 | 0.19 | 0.42 | | | | |

# Voltage drop error in single-phase distribution transformer vs load model accuracy

| | | kvar errors, p.u. of kVA | | | | | | | | | | |
|---|---|---|---|---|---|---|---|---|---|---|---|---|
| | | -0.25 | -0.2 | -0.15 | -0.1 | -0.05 | 0 | 0.05 | 0.1 | 0.15 | 0.2 | 0.25 |
| kW errors, p.u. kVA | -0.25 | | | -0.462 | -0.381 | -0.30 | -0.22 | -0.14 | -0.06 | 0.019 | 0.099 | 0.179 |
| | -0.2 | | -0.498 | -0.418 | -0.337 | -0.26 | -0.18 | -0.10 | -0.02 | 0.064 | 0.144 | 0.224 |
| | -0.15 | | -0.454 | -0.374 | -0.293 | -0.21 | -0.13 | -0.05 | 0.03 | 0.108 | 0.188 | 0.268 |
| | -0.1 | -0.491 | -0.41 | -0.33 | -0.249 | -0.17 | -0.09 | -0.01 | 0.07 | 0.153 | 0.233 | 0.313 |
| | -0.05 | -0.447 | -0.366 | -0.286 | -0.21 | -0.12 | -0.04 | 0.04 | 0.12 | 0.197 | 0.277 | 0.357 |
| | 0 | -0.403 | -0.323 | -0.242 | -0.16 | -0.08 | 0.00 | 0.08 | 0.16 | 0.241 | 0.321 | 0.402 |
| | 0.05 | -0.36 | -0.279 | -0.198 | -0.12 | -0.04 | 0.04 | 0.12 | 0.20 | 0.285 | 0.366 | 0.446 |
| | 0.1 | -0.316 | -0.235 | -0.154 | -0.07 | 0.01 | 0.09 | 0.17 | 0.249 | 0.329 | 0.41 | 0.49 |
| | 0.15 | -0.273 | -0.192 | -0.111 | -0.03 | 0.05 | 0.13 | 0.21 | 0.293 | 0.374 | 0.454 | |
| | 0.2 | -0.229 | -0.148 | -0.067 | 0.01 | 0.09 | 0.18 | 0.26 | 0.337 | 0.417 | 0.498 | |
| | 0.25 | -0.186 | -0.105 | -0.024 | 0.06 | 0.14 | 0.22 | 0.30 | 0.381 | 0.461 | | |

# Sample Secondary Circuits

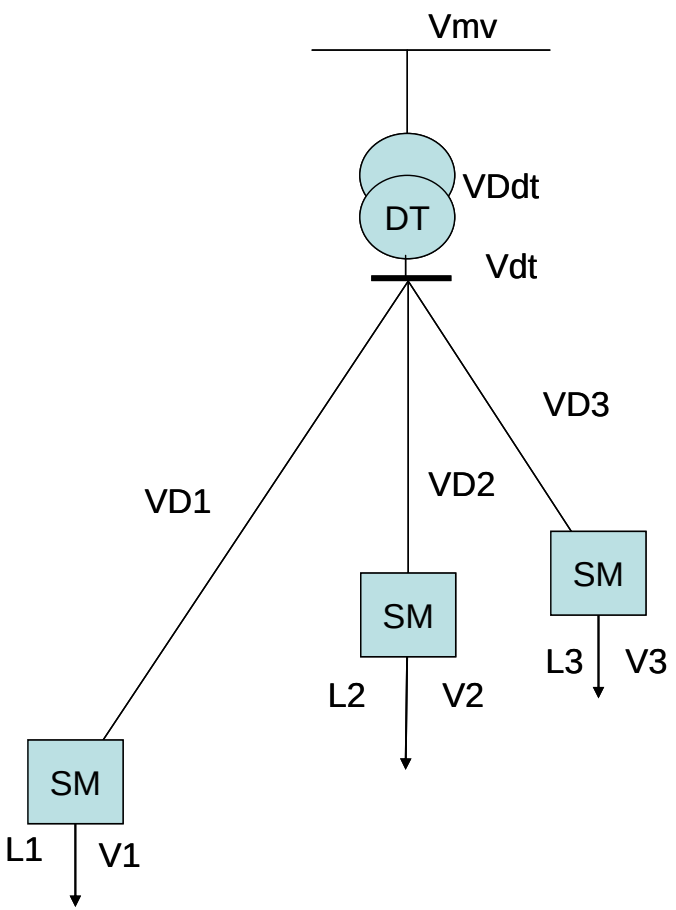


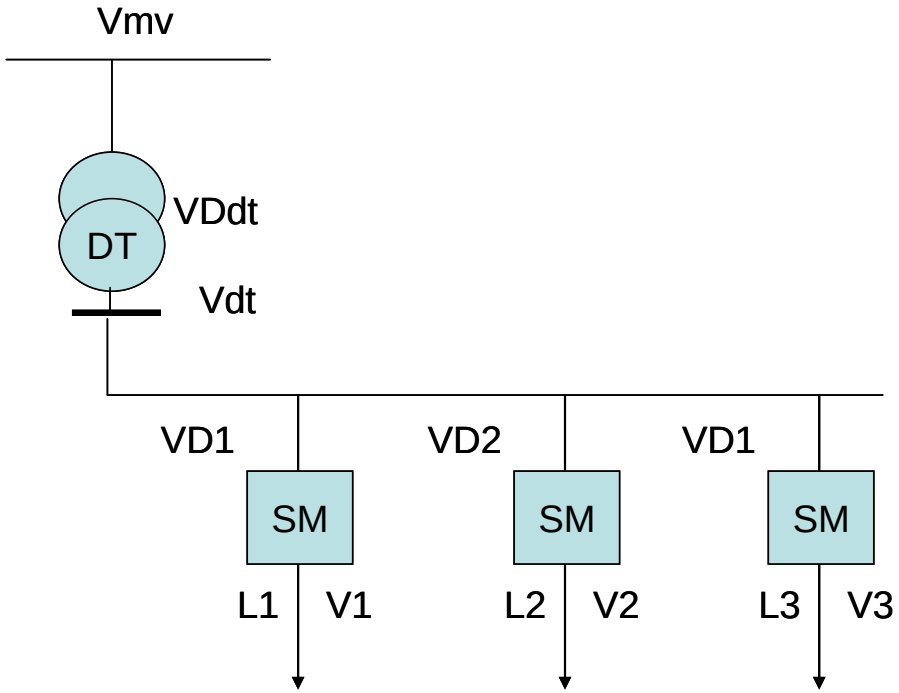

# Equivalent Secondary Circuit

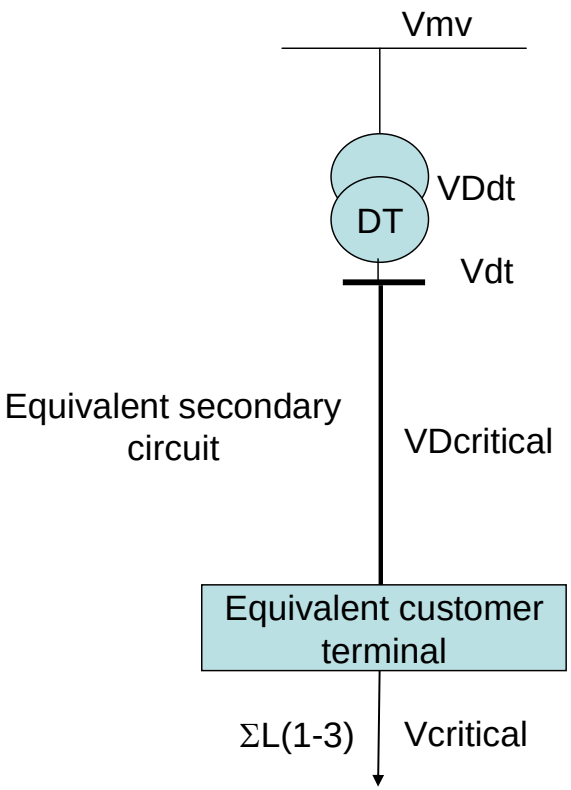

# Example histogram of voltage modeling error mostly due to the error in LV equivalent

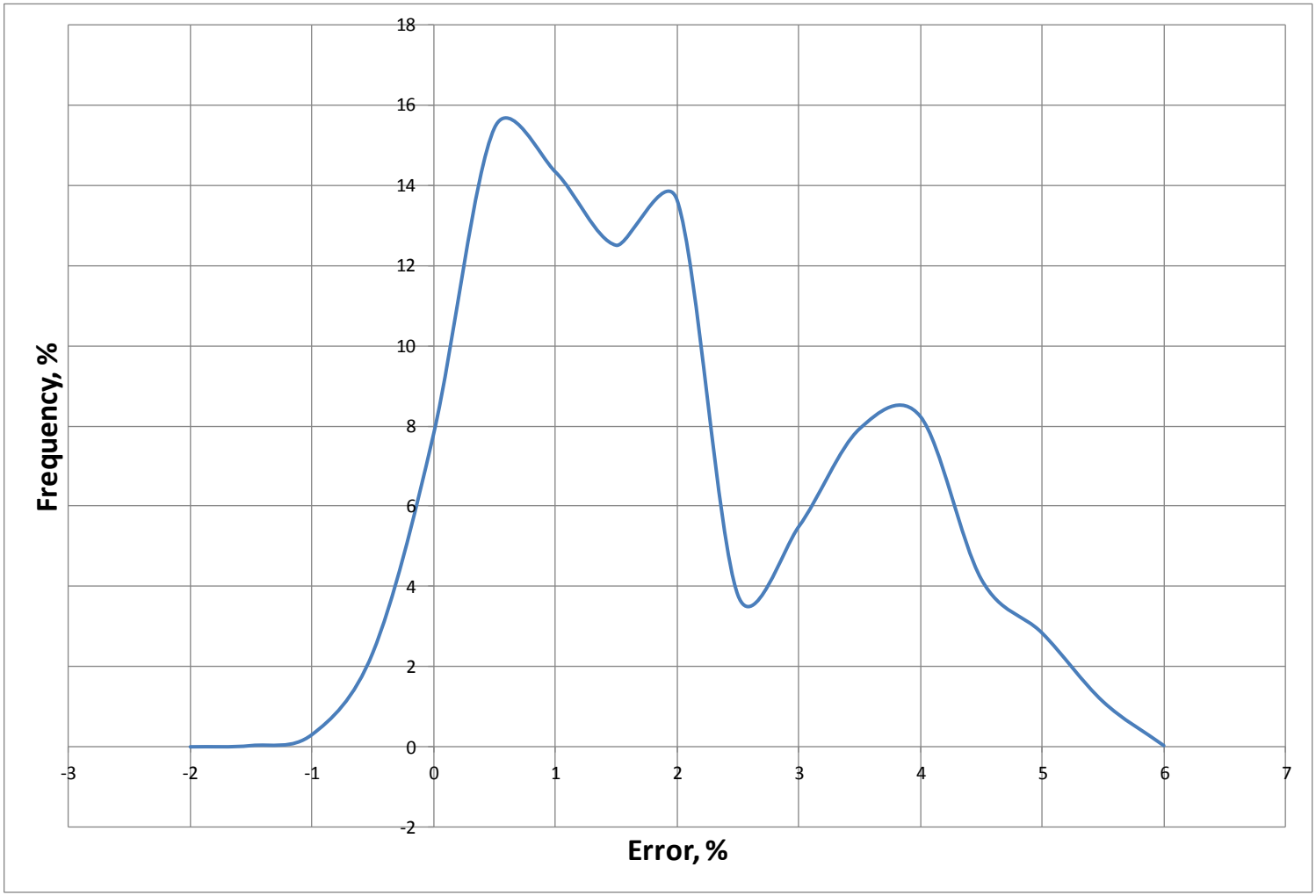

# Assessment of achievable accuracy of VD by utilizing AMI

MV DT LV

$$\Delta VD=(0.5^2+0.5^2+0.5^2)^{0.5} = 0.87\%$$

# Impact of accuracy of models on actual voltage tolerances

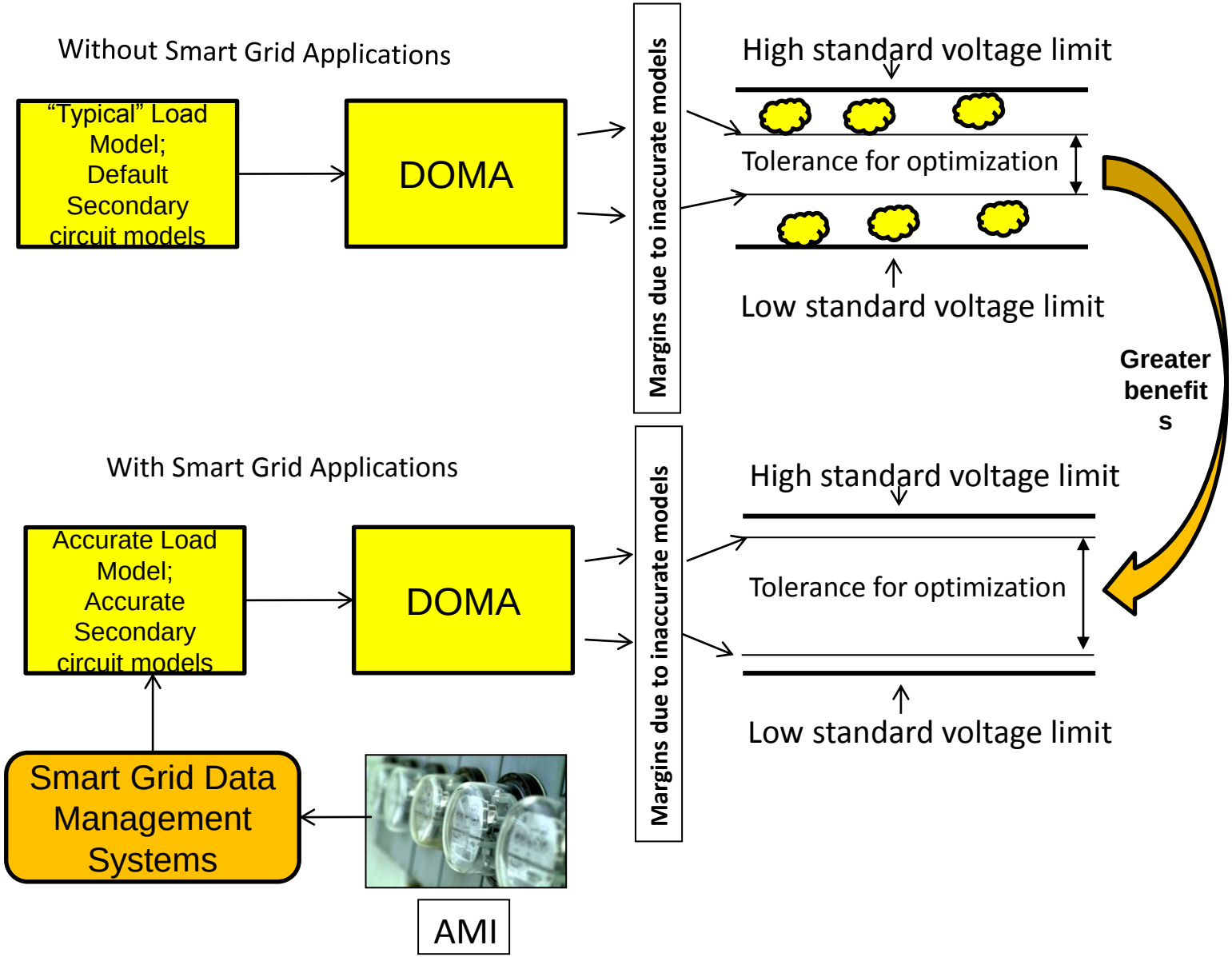

# IMPACT OF MODEL UNCERTAINTY ON BENEFITS

Examples

# Load reduction due to IVVO

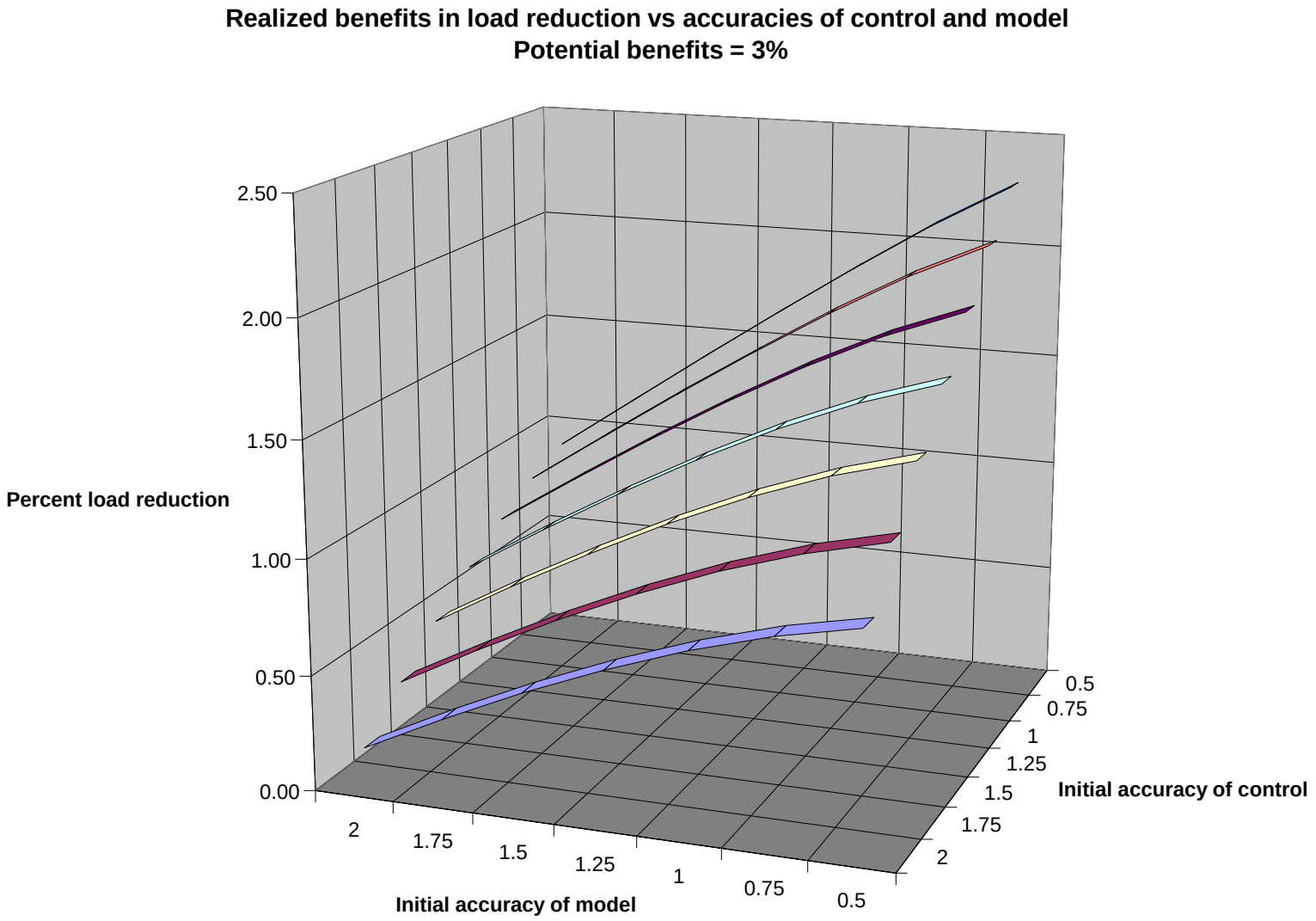

# Benefits of accurately determined voltage–critical nodes with DR (use of AMI for monitoring and controlling DR)

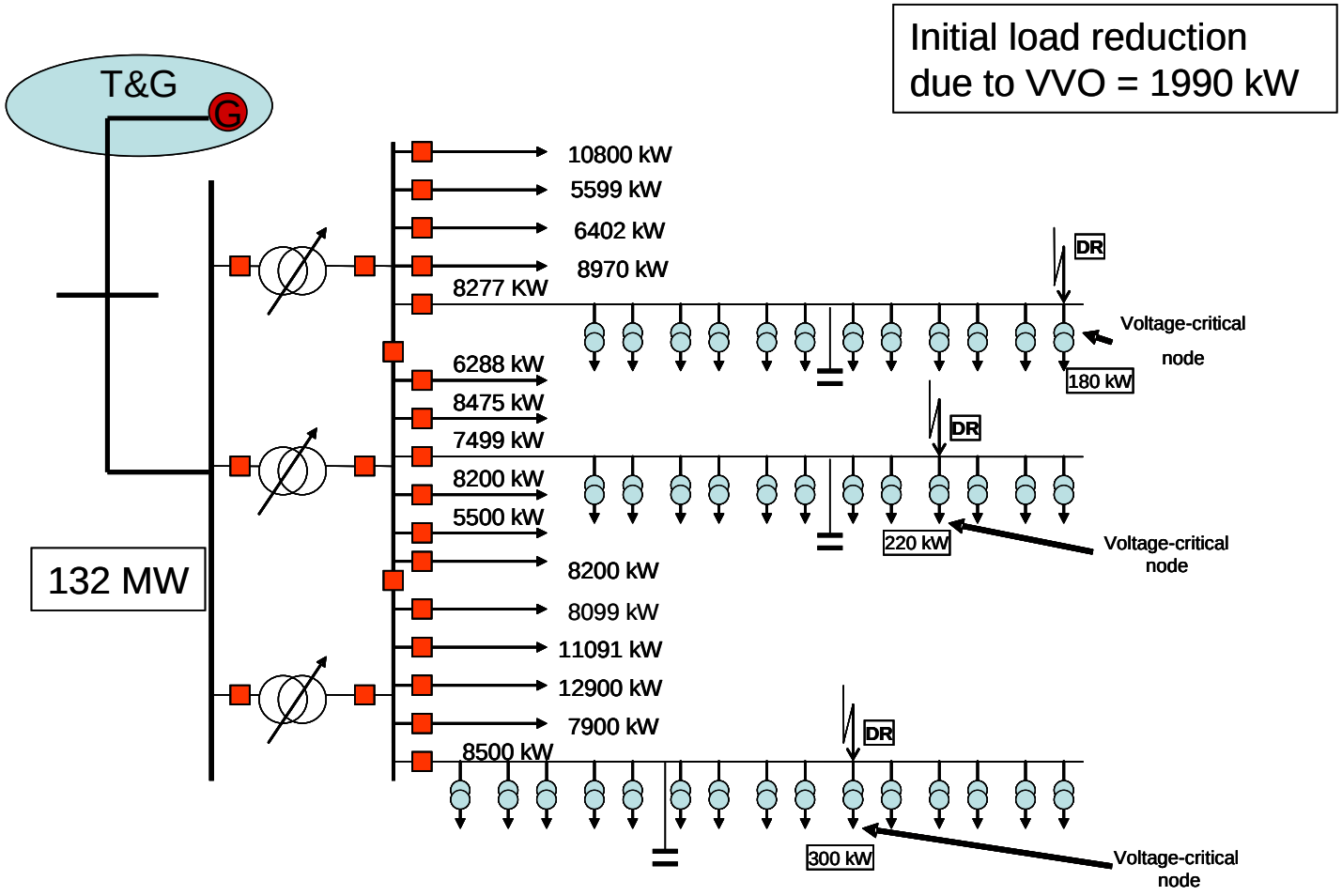


**Total DR = 67 kW; Additional Load Reduction by VVO = 614 kW; Ratio = 9.2; 30% increase of load reduction by VVO**

# Lost benefits due to lack of confidence in secondary voltage models

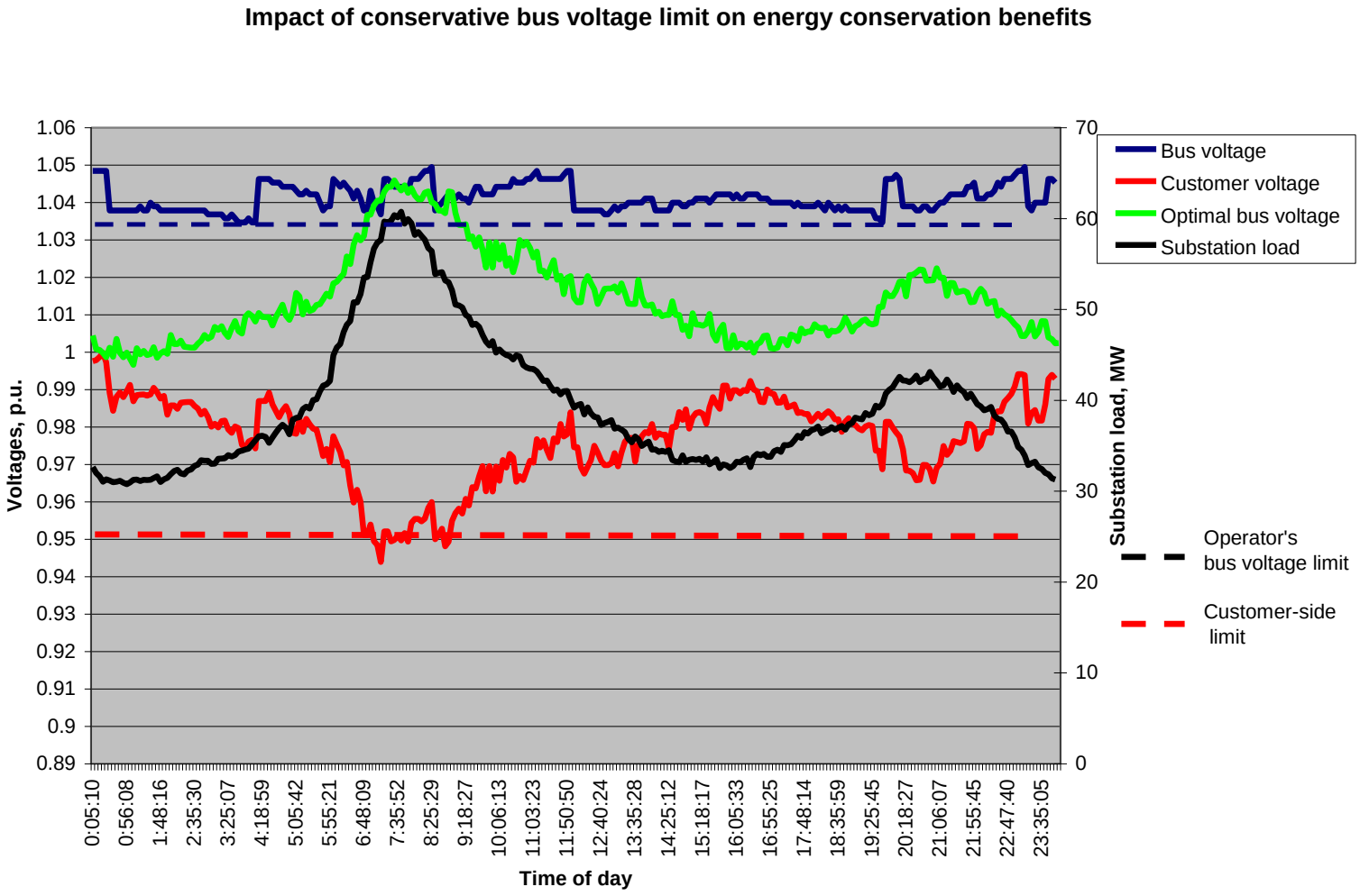

# FLIR Benefits due to AMI
# (fault detection by bellwether meters)

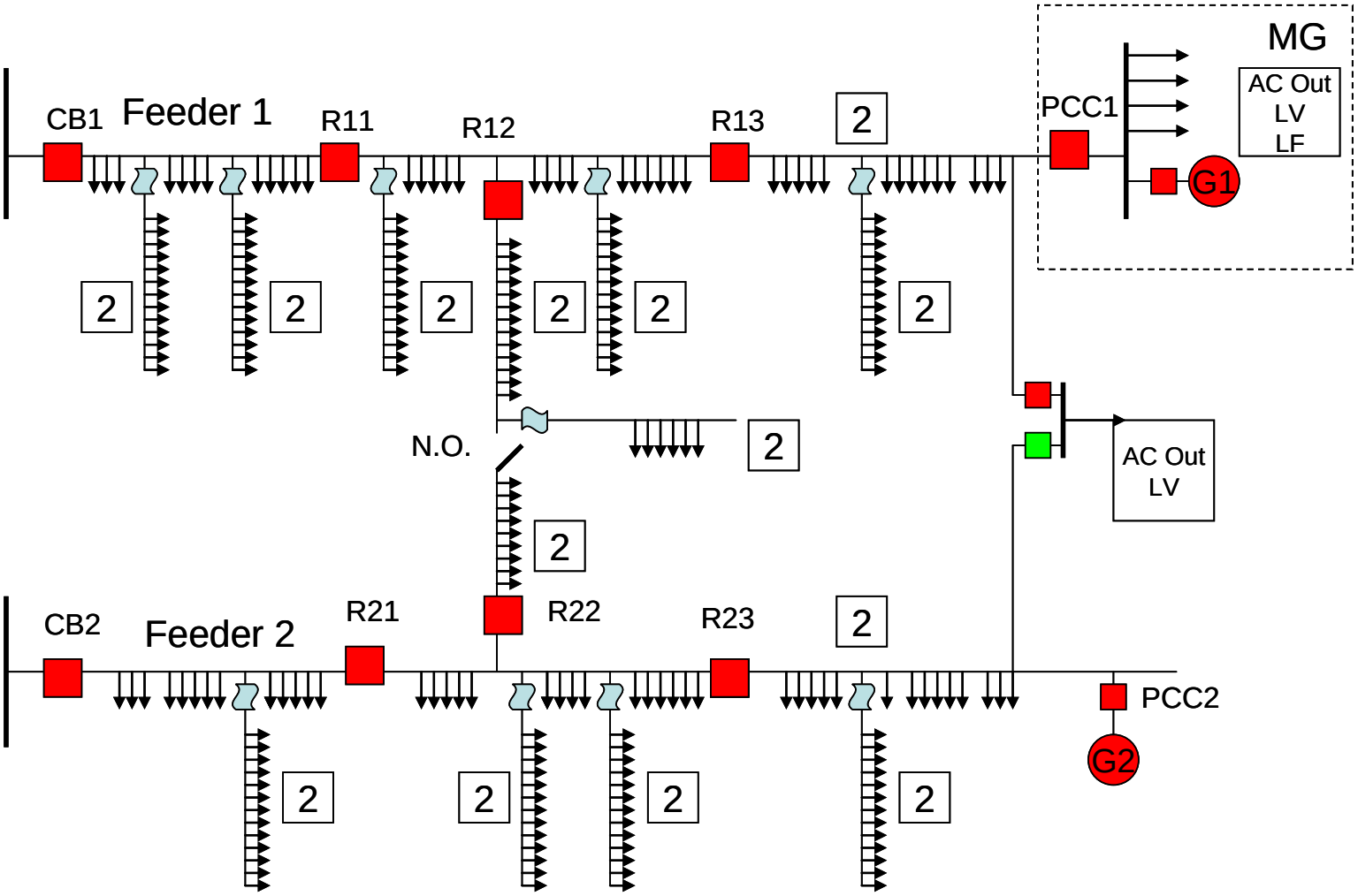

# Impact of model errors on models of transfer capacity limited by voltage (5% limit)

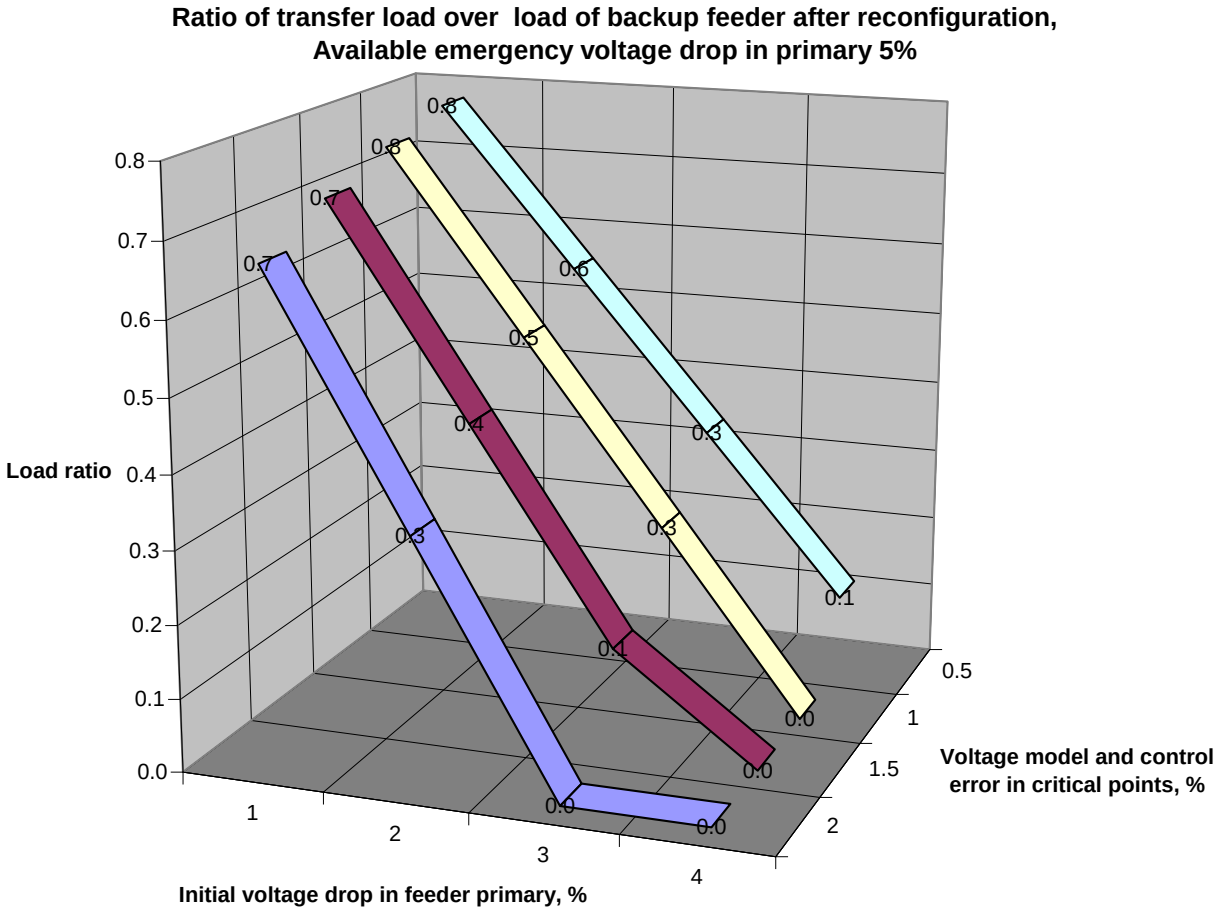

# Time of feeder upgrade

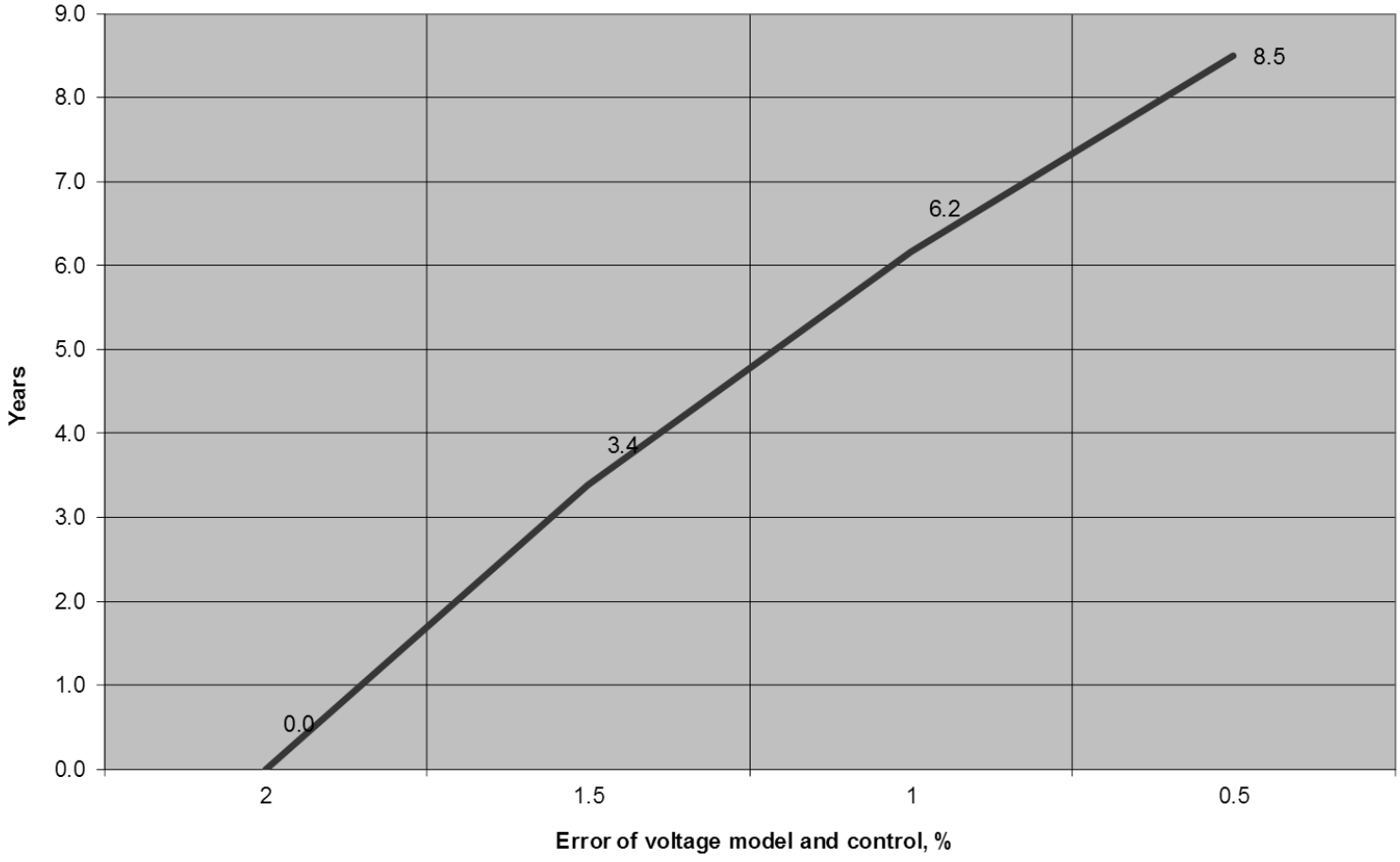

# Interfaces between major actors involved in ADA

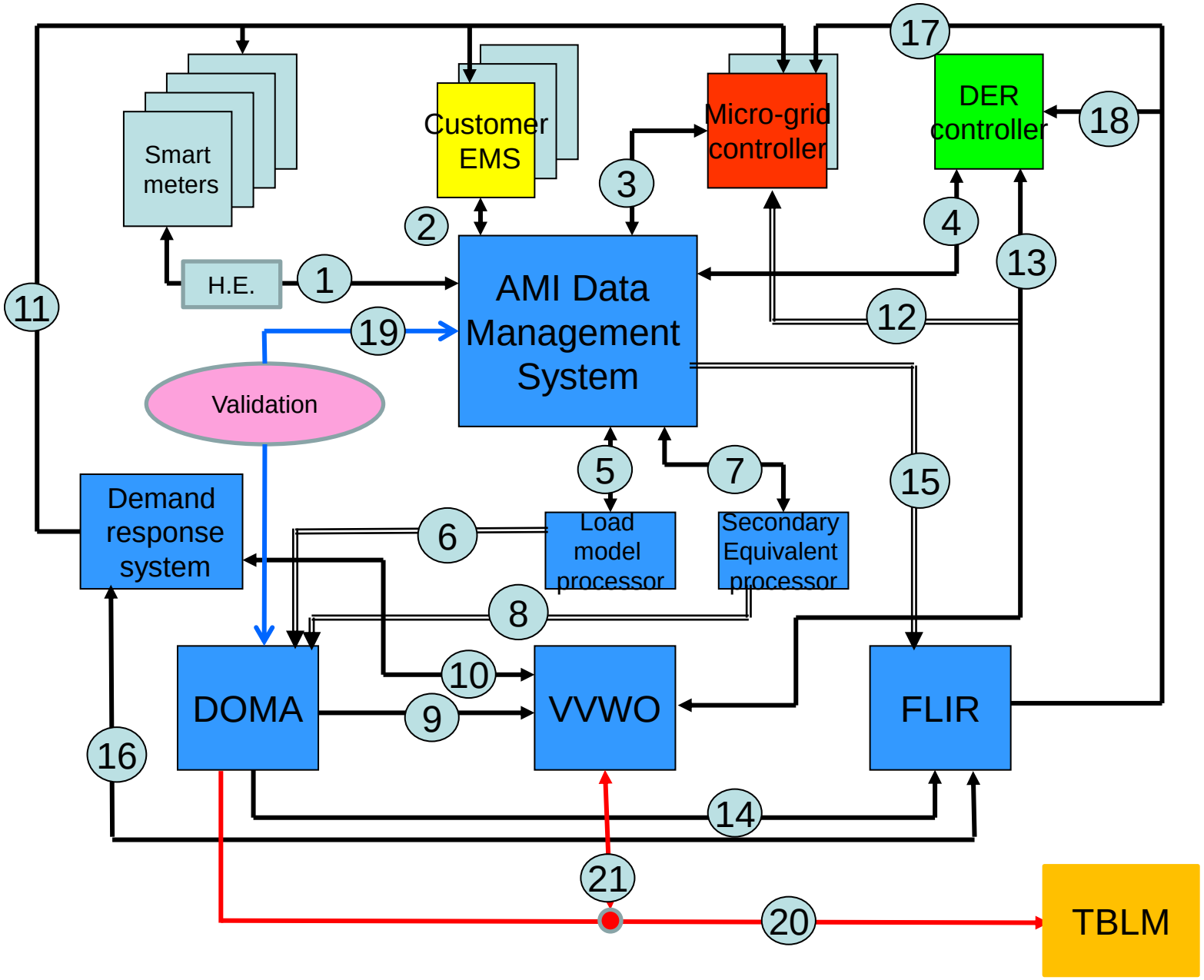

# Messages through interface 1(ANSI C12-19)

- 37 messages were defined in PAP 8 categorization of information exchange for the purpose of supporting DA
- Several messages are not directly or at all covered by the ANSI C12-19 standard, e.g.,
  - Ambient temperature
  - Flickers
  - Instantaneous vars at the time of maximum watts and watts at the time of maximum vars (needed for determining the degree of uncertainty of the models based on interval measurements)

# Conclusions

- AMI-supported data and control capabilities may provide significant added benefits of advanced DA applications.
- The extent of the added values due to involvement of AMI capabilities in DA depends on
  - the design of the DA applications,
  - the contents of data gathered by the Smart Meters and similar systems,
  - the accuracy of information support by sources other than AMI,
  - the accuracy of control actions in the utility.
- Most of the information support needed by DA from the AMI systems does not require direct information exchange between the DA applications and Smart Meters in near real time.
- Advanced procedures for creating adequate adaptive and predictive models should be developed.
- To develop these models, combinations of AMI-supported data with data obtained from other information systems are needed.